US009175684B2

(12) **United States Patent**
McIntyre

(10) **Patent No.: US 9,175,684 B2**
(45) **Date of Patent: Nov. 3, 2015**

(54) **ABUTMENT ROTARY PUMP WITH REPELLING MAGNETS**

(71) Applicant: **John McIntyre**, Traverse City, MI (US)

(72) Inventor: **John McIntyre**, Traverse City, MI (US)

(*) Notice: Subject to any disclaimer, the term of this patent is extended or adjusted under 35 U.S.C. 154(b) by 7 days.

(21) Appl. No.: **14/226,536**

(22) Filed: **Mar. 26, 2014**

(65) **Prior Publication Data**

US 2015/0275896 A1 Oct. 1, 2015

Related U.S. Application Data

(63) Continuation of application No. 14/192,248, filed on Feb. 27, 2014, now abandoned.

(51) **Int. Cl.**

F03C 2/00	(2006.01)
F03C 4/00	(2006.01)
F04C 2/00	(2006.01)
F04C 18/356	(2006.01)
F04C 23/00	(2006.01)
F04C 2/46	(2006.01)
F04C 18/32	(2006.01)
F04C 2/356	(2006.01)

(52) **U.S. Cl.**

CPC ***F04C 18/3564*** (2013.01); ***F04C 2/3566*** (2013.01); ***F04C 2/46*** (2013.01); ***F04C 18/322*** (2013.01); ***F04C 18/356*** (2013.01); ***F04C 23/008*** (2013.01)

(58) **Field of Classification Search**

CPC F04C 23/008; F04C 2/46; F04C 2/3566; F04C 18/322; F04C 18/356; F04C 18/3564; F01C 1/46; F01C 1/063

USPC 418/63, 243, 248, 152–153

See application file for complete search history.

(56) **References Cited**

U.S. PATENT DOCUMENTS

715,933	A	*	12/1902	Allen	418/249
2,238,396	A	*	4/1941	Rabezzana et al.	174/152 S
3,985,473	A	*	10/1976	King et al.	418/248
4,132,512	A	*	1/1979	Roberts	418/23
7,114,931	B2	*	10/2006	Wilk et al.	418/259
2009/0238709	A1	*	9/2009	Youker et al.	418/179
2011/0070115	A1	*	3/2011	Takahashi et al.	418/248
2013/0129547	A1	*	5/2013	Pekrul	418/1
2015/0071807	A1	*	3/2015	McIntye	418/243

FOREIGN PATENT DOCUMENTS

GB	628239	*	8/1949	F04C 2/46

* cited by examiner

Primary Examiner — Theresa Trieu

(57) **ABSTRACT**

A rotary pump device includes a stator chamber with a cylindrical inner wall having intake and exhaust ports and an abutment mounted therein, and a rotor eccentrically mounted on an axial driven shaft for rotation within the chamber. The rotor keeps continuous wiping contact with the chamber wall while repelling magnets exert pressure on an abutment which maintains contact with the rotor to partition the intake and outlet ports. The repelling magnets act as a spring to assure contact of the abutment on the rotor while the pump is running or on standby. The repelling is caused by locating magnets positioned with similar facing poles in a pocket positioned against an abutment. A full intake/exhaust cycle takes place every 360° of rotor travel.
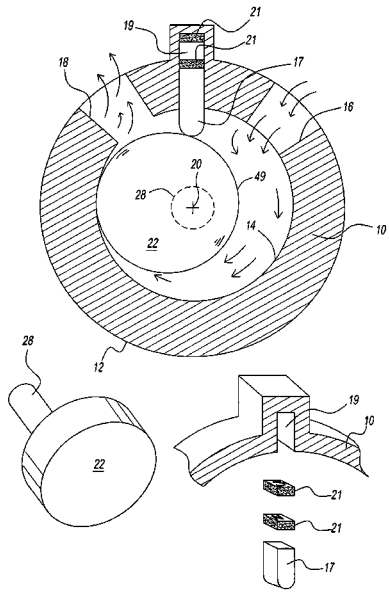
5 Claims, 2 Drawing Sheets