US009056284B2

(12) **United States Patent**
Murphy et al.

(10) **Patent No.: US 9,056,284 B2**
(45) **Date of Patent: Jun. 16, 2015**

(54) **CHLORINE RESISTANT AMIDES, POLYAMIDES, AND MEMBRANES MADE FROM THE SAME**

(75) Inventors: **Andrew Patrick Murphy**, Littleton, CO (US); **Robert Lee Riley**, La Jolla, CA (US); **Yuliana Elvira Porras Mendoza**, Arvada, CO (US)

(73) Assignee: **The United States of America, as represented by The Secretary of the Interior**, Washington, DC (US)

(*) Notice: Subject to any disclaimer, the term of this patent is extended or adjusted under 35 U.S.C. 154(b) by 288 days.

(21) Appl. No.: **13/572,431**

(22) Filed: **Aug. 10, 2012**

(65) **Prior Publication Data**

US 2014/0042082 A1 Feb. 13, 2014

(51) **Int. Cl.**

B01D 39/00	(2006.01)
B01D 29/00	(2006.01)
B01D 29/46	(2006.01)
B01D 63/00	(2006.01)
B01D 61/00	(2006.01)
B01D 71/56	(2006.01)
C08G 69/32	(2006.01)
C08G 69/42	(2006.01)
C08L 77/10	(2006.01)
B01D 67/00	(2006.01)
B01D 69/12	(2006.01)

(52) **U.S. Cl.**

CPC ***B01D 71/56*** (2013.01); ***C08G 69/32*** (2013.01); ***C08G 69/42*** (2013.01); ***C08L 77/10*** (2013.01); ***B01D 67/0006*** (2013.01); ***B01D 69/125*** (2013.01); *B01D 2325/30* (2013.01)

(58) **Field of Classification Search**

CPC B01D 71/56; B01D 69/00; C08G 69/00
USPC 210/500.28, 490, 500.38; 427/244–245
See application file for complete search history.

(56) **References Cited**

U.S. PATENT DOCUMENTS

3,349,062	A *	10/1967	Hill et al.	528/183
3,878,109	A	4/1975	Ikeda et al.	
3,883,628	A *	5/1975	Martin	264/54
3,993,625	A	11/1976	Kurihara et al.	
4,217,227	A	8/1980	Elfert et al.	
4,259,183	A	3/1981	Cadotte	
4,277,344	A	7/1981	Cadotte	

(Continued)

FOREIGN PATENT DOCUMENTS

EP 0 085 111 8/1983

OTHER PUBLICATIONS

Murphy, A. et al. "Development of a New Chlorine and Biofouling Resistant Polyamide Membrane" (Feb. 12, 2003), Annual Report Jan. 2003 thru Jan. 2004 SST Report Jan. 4, 2002, p. 1-68.

(Continued)

Primary Examiner — Ana Fortuna
(74) *Attorney, Agent, or Firm* — John D. Fado; Howard V. Owens, Jr.

(57) **ABSTRACT**

A chlorine resistant polyamide is formed from the reaction product of an amine and an acid chloride monomer wherein both the amine and the acid chloride monomer are modified with electron-withdrawing groups that exhibit sufficient activity to (i) minimize any chlorination on both the amine and acid chloride and (ii) minimize N-chlorination. A membrane is made from the polyamide for use, for example, in a desalination unit.
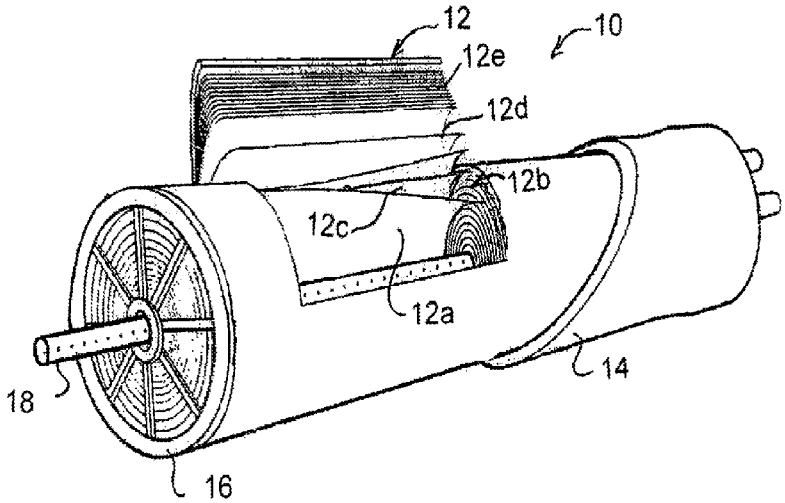
9 Claims, 1 Drawing Sheet