US008955984B2

(12) **United States Patent**
Jung et al.

(10) **Patent No.: US 8,955,984 B2**
(45) **Date of Patent: *Feb. 17, 2015**

(54) **PROJECTION ASSOCIATED METHODS AND SYSTEMS**

(75) Inventors: **Edward K. Y. Jung**, Bellevue, WA (US); **Eric C. Leuthardt**, St. Louis, MO (US); **Royce A. Levien**, Lexington, MA (US); **Richard T. Lord**, Tacoma, WA (US); **Robert W. Lord**, Seattle, WA (US); **Mark A. Malamud**, Seattle, WA (US); **John D. Rinaldo, Jr.**, Bellevue, WA (US); **Lowell L. Wood, Jr.**, Bellevue, WA (US)

(73) Assignee: **The Invention Science Fund I, LLC**, Bellevue, WA (US)

(*) Notice: Subject to any disclaimer, the term of this patent is extended or adjusted under 35 U.S.C. 154(b) by 445 days.

This patent is subject to a terminal disclaimer.

(21) Appl. No.: **12/286,731**

(22) Filed: **Sep. 30, 2008**

(65) **Prior Publication Data**

US 2009/0310101 A1 Dec. 17, 2009

Related U.S. Application Data

(63) Continuation-in-part of application No. 12/214,422, filed on Jun. 17, 2008, and a continuation-in-part of application No. 12/217,118, filed on Jun. 30, 2008, now Pat. No. 8,403,501, and a continuation-in-part of

(Continued)

(51) **Int. Cl.**

G03B 21/22	(2006.01)
G03B 21/56	(2006.01)
G01C 9/00	(2006.01)
G02B 27/32	(2006.01)
G03B 21/00	(2006.01)
H04N 9/31	(2006.01)

(52) **U.S. Cl.**

CPC ***G03B 21/00*** (2013.01); ***H04N 9/3179*** (2013.01); ***H04N 9/3194*** (2013.01); ***H04N 9/3197*** (2013.01)

USPC **353/71**; 359/446; 356/247

(58) **Field of Classification Search**

USPC 353/69, 70, 71, 79, 122; 356/247; 359/446

See application file for complete search history.

(56) **References Cited**

U.S. PATENT DOCUMENTS

3,622,223	A	11/1971	Brakell
3,623,804	A	11/1971	Spreitzer

(Continued)

FOREIGN PATENT DOCUMENTS

JP	2002-202855	A	7/2002
JP	2005-165129	A	6/2005

(Continued)

OTHER PUBLICATIONS

Allen, Danny; "Before Nikon's S1000pj: The Cine-Twin Was the First Camera/Projector Hybrid"; printed on Nov. 25, 2009; pp. 1-2; gizmodo.com; located at http://gizmodo.com/5347564/before-nikons-s1000pj-the-cine+twin-was-the-first-cameraprojector-hybrid.

(Continued)

Primary Examiner — William C Dowling
Assistant Examiner — Ryan Howard

(57) **ABSTRACT**

The present disclosure relates to systems and methods that are related to projection.
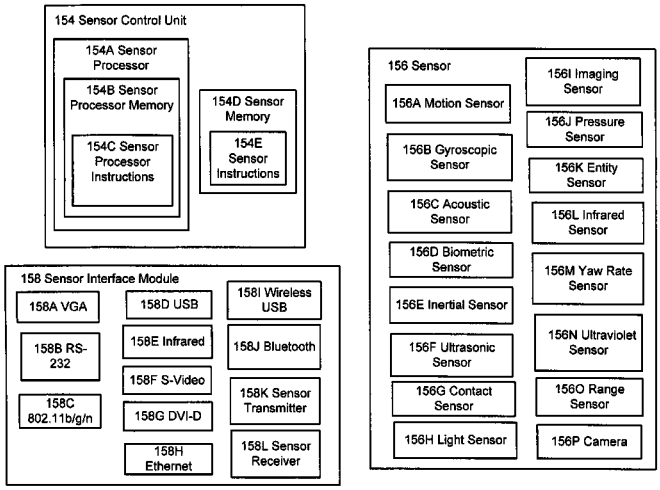
55 Claims, 36 Drawing Sheets