US006151384A

United States Patent [19]

Reed et al.

[11] **Patent Number: 6,151,384**

[45] **Date of Patent: Nov. 21, 2000**

[54] **X-RAY TUBE WITH MAGNETIC ELECTRON STEERING**

[75] Inventors: **Kim W. Reed**; **Bobby N. Turman**; **Ronald J. Kaye**; **Larry X. Schneider**, all of Albuquerque, N. Mex.

[73] Assignee: **Sandia Corporation**, Albuquerque, N. Mex.

[21] Appl. No.: **09/115,322**

[22] Filed: **Jul. 14, 1998**

[51] **Int. Cl.**[7] **H01J 3/14**; H01J 35/14; H01S 3/00

[52] **U.S. Cl.** **378/138**; 372/2; 250/404

[58] **Field of Search** 378/138; 372/2; 250/404

[56] **References Cited**

U.S. PATENT DOCUMENTS

4,007,375	2/1977	Albert	250/404
4,104,526	8/1978	Albert	250/403
4,359,660	11/1982	Smith et al.	378/119
4,652,763	3/1987	Nablo	250/492.3
4,694,457	9/1987	Kelley et al.	372/2
4,764,947	8/1988	Lesensky	378/138
4,912,738	3/1990	Turchi	378/121
5,048,068	9/1991	Turchi	378/121
5,090,041	2/1992	Furbee	378/93
5,105,456	4/1992	Rand et al.	378/125
5,268,955	12/1993	Burke et al.	378/135
5,422,926	6/1995	Smith et al.	378/121
5,426,686	6/1995	Rentzepis et al.	378/34
5,442,678	8/1995	Dinsmore et al.	378/137
5,563,407	10/1996	Yamagishi	250/214 UT
5,610,967	3/1997	Moorman et al.	378/154
5,621,780	4/1997	Smith et al.	378/65

Primary Examiner—Frank G. Font
Assistant Examiner—Armando Rodriguez
Attorney, Agent, or Firm—V. Gerald Grafe

[57] **ABSTRACT**

An X-ray tube uses a magnetic field to steer electrons. The magnetic field urges electrons toward the anode, increasing the proportion of electrons emitted from the cathode that reach desired portions of the anode and consequently contribute to X-ray production. The magnetic field also urges electrons reflected from the anode back to the anode, further increasing the efficiency of the tube.
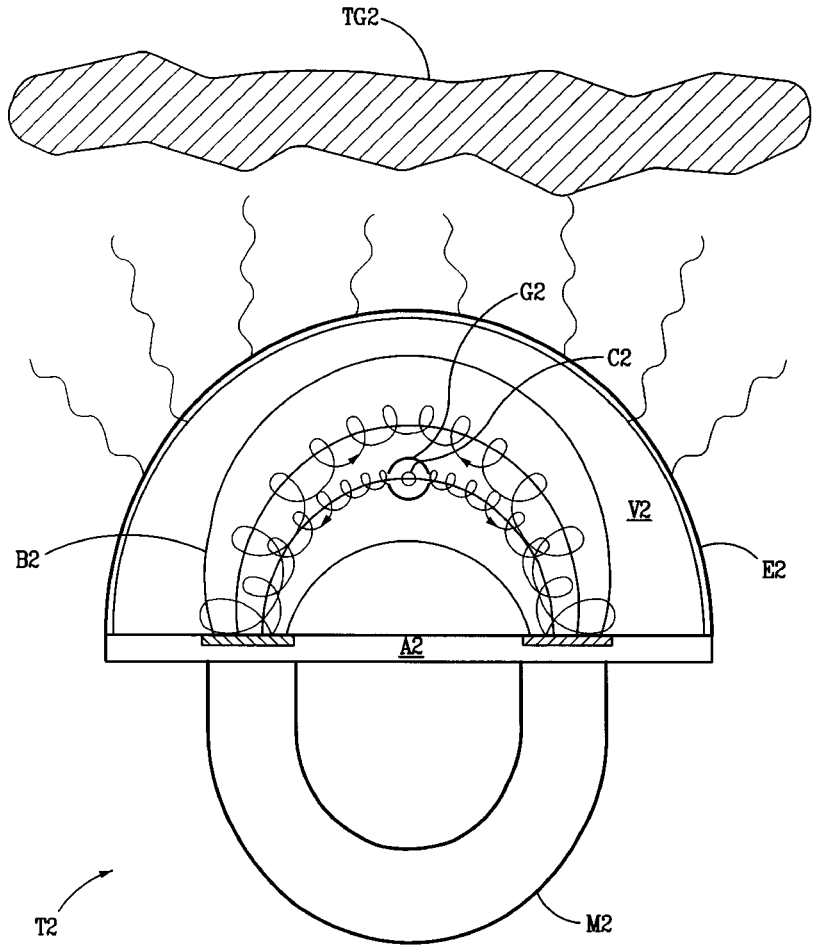
14 Claims, 9 Drawing Sheets