US009636884B2

(12) **United States Patent**
Stroud

(10) **Patent No.: US 9,636,884 B2**
(45) **Date of Patent: May 2, 2017**

(54) **BOX CONFIGURING TOOL AND DISPENSER**

(71) Applicant: **Otto M Stroud**, Virginia Beach, VA (US)

(72) Inventor: **Otto M Stroud**, Virginia Beach, VA (US)

(*) Notice: Subject to any disclaimer, the term of this patent is extended or adjusted under 35 U.S.C. 154(b) by 0 days.

(21) Appl. No.: **15/134,001**

(22) Filed: **Apr. 20, 2016**

(65) **Prior Publication Data**

US 2016/0318276 A1 Nov. 3, 2016

Related U.S. Application Data

(60) Provisional application No. 62/154,835, filed on Apr. 30, 2015.

(51) **Int. Cl.**

B31B 1/78	(2006.01)
B31B 47/04	(2006.01)
B65B 67/02	(2006.01)

(52) **U.S. Cl.**

CPC ***B31B 47/04*** (2013.01); ***B65B 67/02*** (2013.01); *B31B 2201/281* (2013.01); *B31B 2247/00* (2013.01)

(58) **Field of Classification Search**

CPC B31B 47/04; B31B 2247/00; B65B 67/02

USPC 493/309, 440, 447, 456, 70

See application file for complete search history.

(56) **References Cited**

U.S. PATENT DOCUMENTS

2,947,229	A *	8/1960	Caresio	B31B 1/76	493/310
3,477,349	A *	11/1969	Berney	227/108	
3,748,972	A *	7/1973	Barton	B31B 1/06	493/124
3,796,141	A *	3/1974	Mueller	493/310	
3,800,681	A *	4/1974	Corderoy	B31B 1/46	493/151
3,896,711	A *	7/1975	Vuilleumier	B31B 1/80	493/314
3,915,077	A *	10/1975	LaFleur	B31B 37/00	156/510
4,160,406	A *	7/1979	Nowacki	B31B 1/06	493/125
RE30,921	E *	5/1982	McDowell	B31B 1/06	271/132
4,437,851	A *	3/1984	Salenbo	B31B 1/80	493/123
4,512,756	A *	4/1985	Fields	B31B 1/76	493/312
4,578,054	A *	3/1986	Herrin	B31B 1/06	493/126
4,678,456	A *	7/1987	Nigrelli, Sr.	B31B 1/06	493/309

(Continued)

Primary Examiner — Sameh Tawfik

(74) *Attorney, Agent, or Firm* — Peter J. Van Bergen

(57) **ABSTRACT**

A box configuring tool includes a base having a planar surface, a first stop positioned at a first end of the base, and a second stop positioned at a second end of the base opposing the first end of the base. The tool also includes a pair of spaced-apart walls coupled to the base to define an open-ended chute along the base's planar surface. The open-ended chute is disposed between the first stop and the second stop. The open-ended chute has a tapered-width portion contiguous with a constant-width portion.
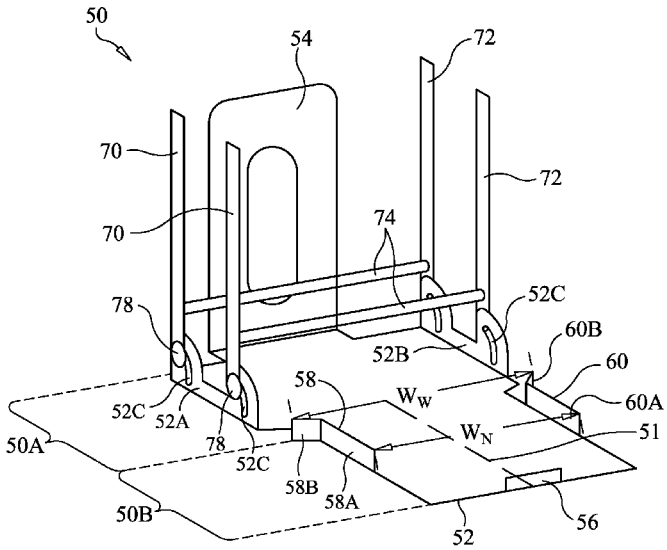
13 Claims, 5 Drawing Sheets