United States Patent

[11] 3,609,584

[72] Inventors Malcolm L. Stitch;
Walter Koechner, both of Malibu, Calif.

[21] Appl. No. 10,401
[22] Filed Feb. 11, 1970
[45] Patented Sept. 28, 1971
[73] Assignee Union Carbide Corporation
New York, N.Y.

[54] **METHOD AND MEANS FOR COMPENSATING THERMAL LENSING IN A LASER SYSTEM**
7 Claims, 3 Drawing Figs.

[52] **U.S. Cl.** ..... **331/94.5,** 350/175 GN
[51] **Int. Cl.** **H01s 3/00**
[50] **Field of Search** ..... 331/94.5; 350/96 WG, 160, 175 GN, 179

[56] **References Cited**

UNITED STATES PATENTS

3,399,012	8/1968	Peters	360/96
3,484,714	12/1969	Koester et al.	331/194.5
3,531,185	9/1970	Bucksbaum	350/179

OTHER REFERENCES

Akhmanov et al., IEEE Jour. of Quantum Electronics, Vol. QE-4, pp. 568–575, Oct. 1968

Primary Examiner—Ronald L. Wibert
Assistant Examiner—Edward S. Bauer
Attorney—Pastoriza & Kelly

ABSTRACT: A negative thermal circular lens is provided for compensating the thermal lensing effect inherent in output radiation generated by a solid-state laser rod of the annular configuration. The compensating thermal lens is of annular construction with metallic coatings on its inner and outer cylindrical surfaces. These coatings are heated by RF energy to develop a thermal gradient in the direction to induce stress resulting in a negative lensing effect so that the positive lensing effect in the annular laser output beam is substantially canceled.
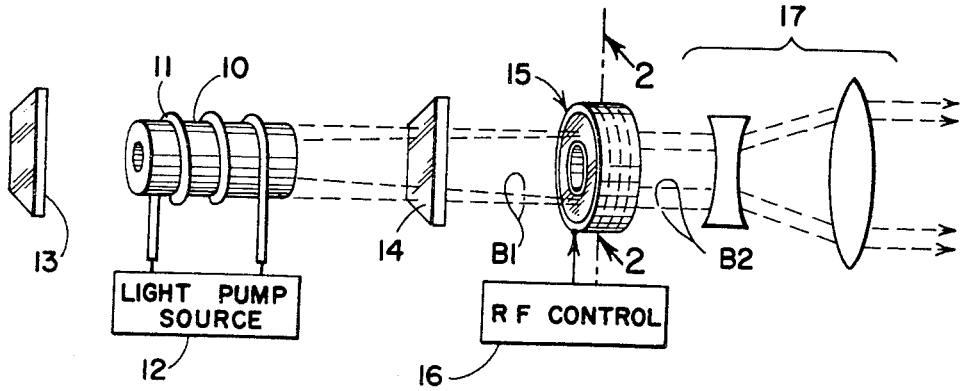
This invention relates generally to a method and means for compensating thermal lensing in a laser system and more particularly to the compensation of laser radiation generated by solid-state-annular-type laser rods.