US009409384B2

(12) **United States Patent**
**Gila et al.**

(10) **Patent No.: US 9,409,384 B2**
(45) **Date of Patent: Aug. 9, 2016**

(54) **PRINTERS, METHODS AND APPARATUS TO FORM AN IMAGE ON A PRINT SUBSTRATE**

(71) Applicant: **HEWLETT-PACKARD DEVELOPMENT COMPANY, L.P.**, Houston, TX (US)

(72) Inventors: **Omer Gila**, Palo Alto, CA (US); **Daihua Zhang**, Palo Alto, CA (US); **Yossi Rosen**, Nes Ziona (IL); **Ilanit Mor**, Nes Ziona (IL)

(73) Assignee: **Hewlett-Packard Development Company, L.P.**, Houston, TX (US)

( * ) Notice: Subject to any disclaimer, the term of this patent is extended or adjusted under 35 U.S.C. 154(b) by 0 days.

(21) Appl. No.: **14/790,255**

(22) Filed: **Jul. 2, 2015**

(65) **Prior Publication Data**

US 2015/0306866 A1 Oct. 29, 2015

**Related U.S. Application Data**

(63) Continuation of application No. 13/981,561, filed on Jul. 24, 2013, now Pat. No. 9,096,052.

(51) **Int. Cl.**

| | |
|---|---|
| ***G03G 15/10*** | (2006.01) |
| ***B41F 13/193*** | (2006.01) |
| ***B41J 2/005*** | (2006.01) |
| ***B41F 7/02*** | (2006.01) |
| ***G03G 15/16*** | (2006.01) |
| ***G03G 15/00*** | (2006.01) |
| ***G03G 13/01*** | (2006.01) |
| ***B41J 2/01*** | (2006.01) |

(52) **U.S. Cl.**

CPC ..... ***B41F 13/193*** (2013.01); ***B41F 7/02*** (2013.01); ***B41J 2/0057*** (2013.01); ***B41J 2/01*** (2013.01); ***G03G 13/013*** (2013.01); ***G03G 15/1685*** (2013.01); ***G03G 15/6585*** (2013.01); *B41J 2002/012* (2013.01); *B41P 2227/70* (2013.01); *G03G 2215/018* (2013.01)

(58) **Field of Classification Search**

CPC ..... B41F 16/0006; G03G 15/6585
USPC ..... 399/223, 231, 233, 237
See application file for complete search history.

(56) **References Cited**

U.S. PATENT DOCUMENTS

| | | | |
|---|---|---|---|
| 4,945,387 | A | 7/1990 | Landa et al. |
| 5,028,964 | A | 7/1991 | Landa et al. |
| 5,047,808 | A | 9/1991 | Landa et al. |
| 5,089,856 | A | 2/1992 | Landa et al. |
| 5,157,238 | A | 10/1992 | Landa et al. |
| 5,286,948 | A | 2/1994 | Landa et al. |
| 5,335,054 | A | 8/1994 | Landa et al. |
| 5,497,222 | A | 3/1996 | Landa et al. |

(Continued)

FOREIGN PATENT DOCUMENTS

| | | |
|---|---|---|
| JP | 1993-281863 | 10/1993 |
| JP | 08-039772 | 2/1996 |

(Continued)

*Primary Examiner* — William J Royer
(74) *Attorney, Agent, or Firm* — HP Inc Patent Department

(57) **ABSTRACT**

Printers, methods, and apparatus to form an image on a substrate are disclosed. An example apparatus to form an image on a print substrate includes an applicator to apply a first material, an ink developer to apply a plurality of ink particles, and a transfer cylinder to transfer the ink particles and the first material to the print substrate to form an image and a coating.
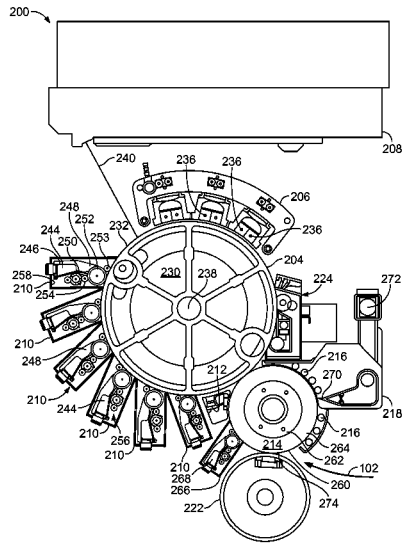
**15 Claims, 8 Drawing Sheets**