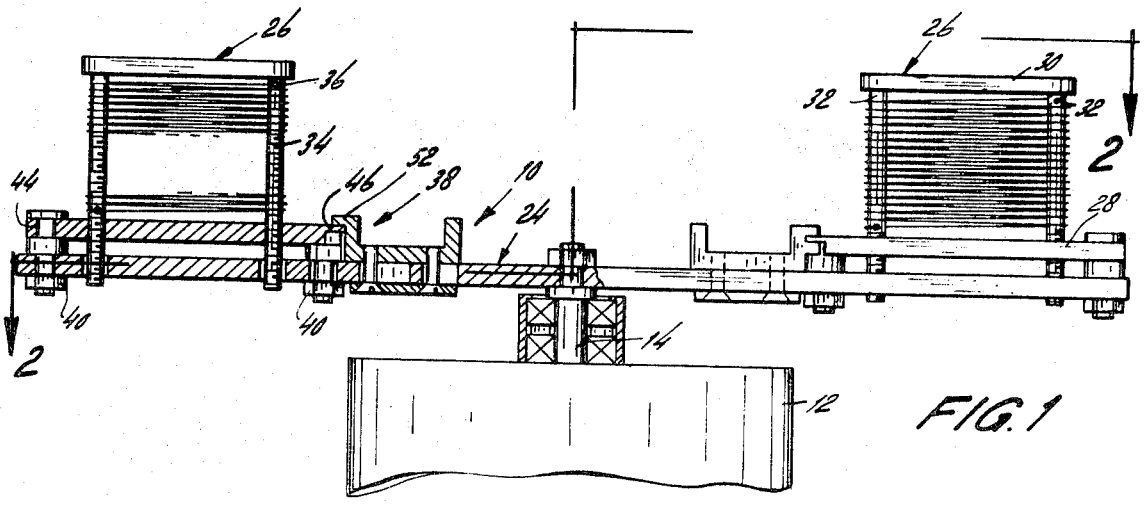

FIG. 1

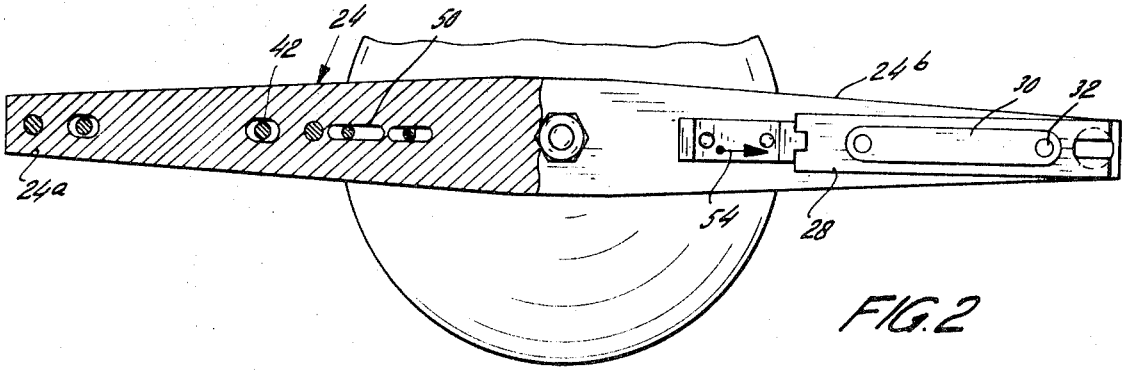

FIG. 2

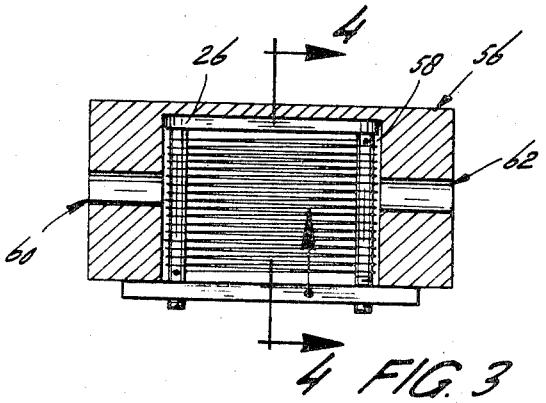

FIG. 3

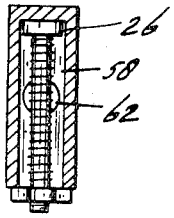

FIG. 4

INVENTORS
DONALD J. SIBBETT
RUDOLPH H. MOYER
DAVID C. SUTHERLAND
HOWARD H. ANDERSON

BY David H. Semmes
ATTORNEY