US005680183A

United States Patent [19]

Sasuga et al.

[11] Patent Number: 5,680,183

[45] Date of Patent: Oct. 21, 1997

[54] **STRUCTURE OF LIQUID CRYSTAL DISPLAY DEVICE FOR EASY ASSEMBLY AND DISASSEMBLY**

[75] Inventors: **Masumi Sasuga**; **Junichi Ohwada**; **Akira Kobayashi**; **Masaru Fujita**; **Hiroshi Nakamoto**, all of Mobara; **Ryu Ono**, Chiba; **Tsutomu Isono**, Ohtaki-machi, all of Japan

[73] Assignees: **Hitachi, Ltd.**, Tokyo; **Hitachi Device Engineering Co., Ltd.**, Mobara, both of Japan

[21] Appl. No.: **460,933**

[22] Filed: **Jun. 5, 1995**

Related U.S. Application Data

[63] Continuation of Ser. No. 197,848, Feb. 15, 1994, abandoned, which is a continuation of Ser. No. 29,622, Mar. 11, 1993, Pat. No. 5,432,626.

[30] **Foreign Application Priority Data**

Mar. 12, 1992 [JP] Japan 4-053452

[51] **Int. Cl.**[6] **G02F 1/1333**; G02F 1/1345

[52] **U.S. Cl.** **349/58**; 349/59; 349/150

[58] **Field of Search** 359/83, 88; 349/58, 349/59, 150

[56] **References Cited**

U.S. PATENT DOCUMENTS

4,294,517	10/1981	Jakubek	359/83
4,367,467	1/1983	Emile, Jr.	359/83
4,486,077	12/1984	Torresdal	359/83
4,755,035	7/1988	Kopish et al.	359/83
4,772,100	9/1988	Suenaga	359/83
4,878,738	11/1989	Hanami	359/83
5,130,833	7/1992	Mase	359/88
5,146,354	9/1992	Plesingo	359/49
5,258,866	11/1993	Ishikawa et al.	359/88
5,311,341	5/1994	Hirai	359/88
5,327,267	7/1994	Aoki et al.	359/87
5,341,233	8/1994	Tomoike et al.	359/88
5,402,255	3/1995	Nakanishi et al.	359/85

FOREIGN PATENT DOCUMENTS

1-219823	9/1989	Japan	359/48
2-17776	2/1990	Japan .	
4-43327	2/1992	Japan .	

Primary Examiner—Anita Pellman Gross

Attorney, Agent, or Firm—Antonelli, Terry, Stout & Kraus, LLP.

[57] **ABSTRACT**

A liquid crystal display device which comprises: a shield casing made of a metal plate and having fixing pawls and fixing hooks; an middle frame for holding a liquid crystal display; and a lower casing for packaging back lights, wherein the fixing pawls of said shield casing are bent in corresponding recesses formed in the middle frame, and wherein the fixing hooks of said shield casing are fitted on corresponding projections formed on the lower casing.
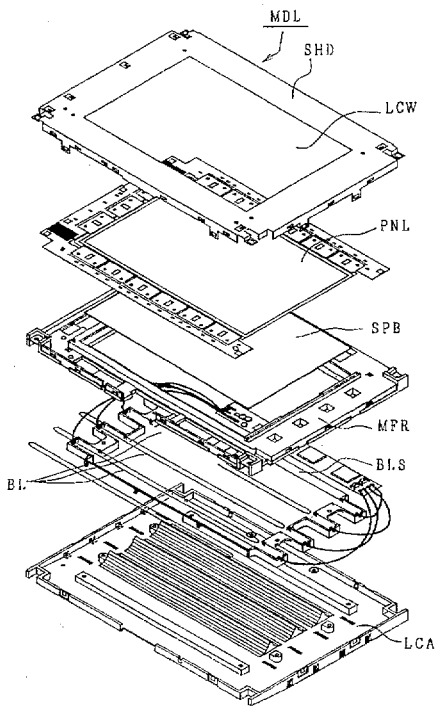
26 Claims, 37 Drawing Sheets