US00D568283S

(12) United States Design Patent

Kim et al.

(10) Patent No.: US D568,283 S
(45) Date of Patent: ** May 6, 2008

(54) **CELLULAR PHONE**

(75) Inventors: **Kuk-Hwan Kim**, Seoul (KR); **Nam-Mi Kim**, Seoul (KR); **Chang-Hwan Hwang**, Goyang-si (KR)

(73) Assignee: **Samsung Electronics Co., Ltd.**, Suwon-Si (KR)

(**) Term: **14 Years**

(21) Appl. No.: **29/270,453**

(22) Filed: **Dec. 26, 2006**

(51) **LOC (8) Cl.** **14-03**
(52) **U.S. Cl.** **D14/138**
(58) **Field of Classification Search** D14/496, D14/138, 341–347; 455/575.3, 575.1; D21/517, D21/329, 333
See application file for complete search history.

(56) **References Cited**

U.S. PATENT DOCUMENTS

D321,865	S	*	11/1991	Derocher	D14/345
5,260,998	A	*	11/1993	Takagi	379/433.13
D352,503	S	*	11/1994	Nagele	D14/138
5,436,954	A	*	7/1995	Nishiyama et al.	455/566
D379,983	S	*	6/1997	Shindou	D14/138
D449,605	S	*	10/2001	Schebesch et al.	D14/345
D482,030	S	*	11/2003	Kataoka	D14/345
D488,154	S	*	4/2004	Lovelady et al.	D14/345
6,934,568	B2	*	8/2005	Charlier et al.	455/575.3
D518,467	S	*	4/2006	Kim et al.	D14/138
D520,980	S	*	5/2006	Taniyama et al.	D14/138
D536,320	S	*	2/2007	Michaels	D14/138
D543,172	S	*	5/2007	Lee et al.	D14/138
D546,307	S	*	7/2007	Lee	D14/138
D548,212	S	*	8/2007	Lee	D14/138
D551,643	S	*	9/2007	Kim et al.	D14/138
2005/0261040	A1	*	11/2005	Andersson et al.	455/575.3
2005/0282596	A1	*	12/2005	Park et al.	455/575.3
2006/0094482	A1	*	5/2006	Takagi	455/575.3
2006/0135225	A1	*	6/2006	Lin et al.	455/575.3
2006/0135226	A1	*	6/2006	Won et al.	455/575.3
2007/0060217	A1	*	3/2007	Kim	455/575.3
2007/0161414	A1	*	7/2007	Wang et al.	455/575.3

OTHER PUBLICATIONS

Samsung U300, announced Feb. 2007, [online], [site visited Dec. 16, 2007]. Available from Internet ,<URL: http://www.gsmarena.com>.*
Samsung X520, announced Oct. 2006, [online], [site visited Dec. 16, 2007]. Available from Internet ,<URL: http://www.gsmarena.com>.*
Samsung D830, announced Jun. 2006, [online], [site visited Dec. 16, 2007]. Available from Internet ,<URL: http://www.gsmarena.com>.*
Samsung E870, announced 1st quarter 2006, [online], [site visited Dec. 16, 2007]. Available from Internet ,<URL: http://www.gsmarena.com>.*

(Continued)

Primary Examiner—Jeffrey Asch
(74) *Attorney, Agent, or Firm*—Staas & Halsey LLP

(57) **CLAIM**

The ornamental design for a cellular phone, as shown and described.

DESCRIPTION

FIG. **1** is a perspective view of a cellular phone according to our new design;

FIG. **2** is a front elevational view thereof;

FIG. **3** is a rear elevational view thereof;

FIG. **4** is a left side elevational view thereof;

FIG. **5** is a right side elevational view thereof;

FIG. **6** is a top plan view thereof;

FIG. **7** is a bottom plan view thereof; and,

FIG. **8** is a perspective view of the cellular phone according to our new design in a state in which the cellular phone is open to be used.

The surface(s) or portion(s) of the article not shown in the drawing or described in the specification form(s) no part of the claimed design.
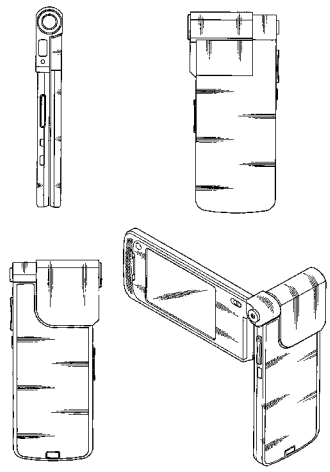
1 Claim, 8 Drawing Sheets