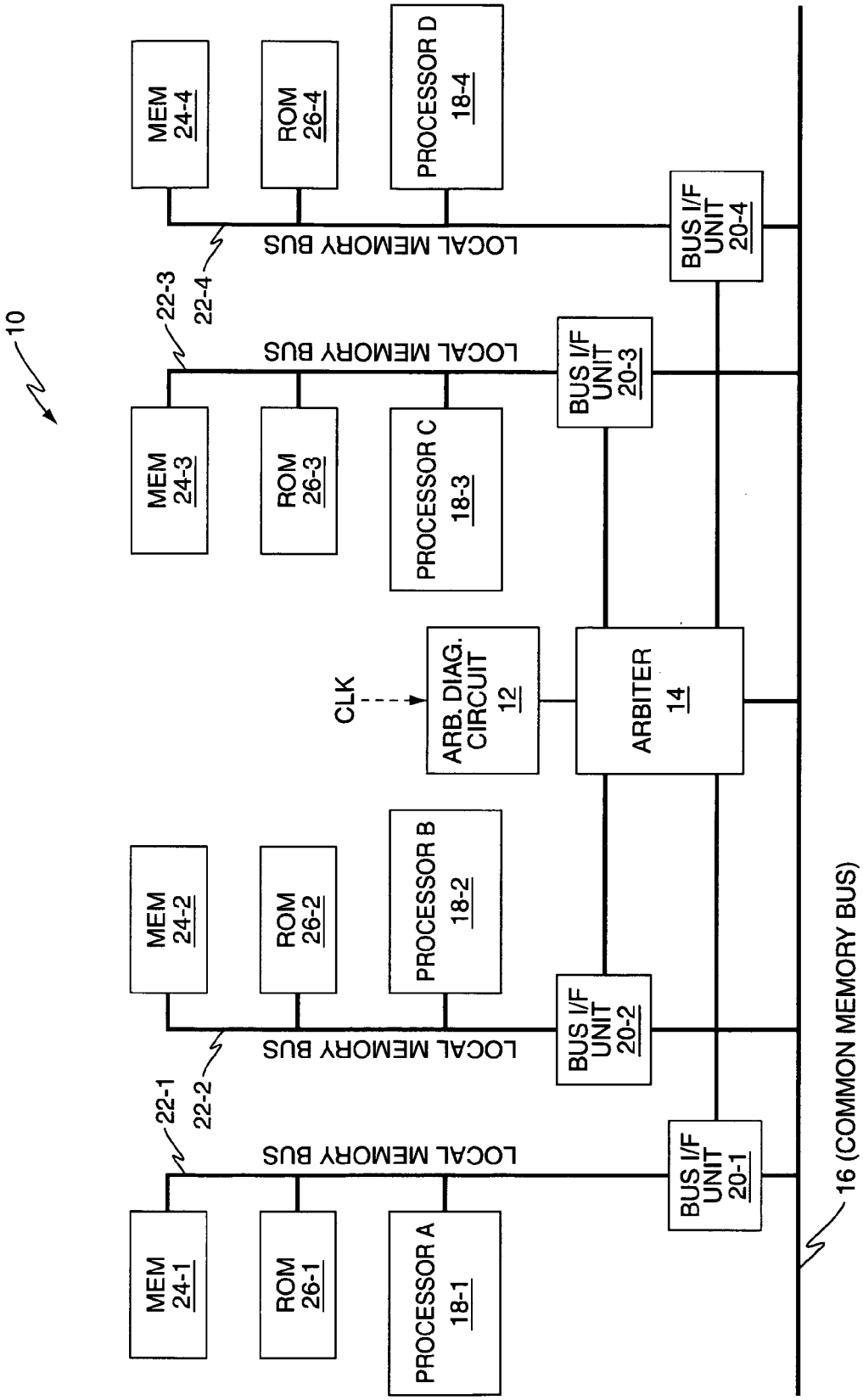
10
MEM 24-1
ROM 26-1
PROCESSOR A 18-1
LOCAL MEMORY BUS
22-1
MEM 24-2
ROM 26-2
PROCESSOR B 18-2
LOCAL MEMORY BUS
22-2
MEM 24-3
ROM 26-3
PROCESSOR C 18-3
LOCAL MEMORY BUS
22-3
MEM 24-4
ROM 26-4
PROCESSOR D 18-4
LOCAL MEMORY BUS
22-4
CLK
ARB. DIAG. CIRCUIT 12
ARBITER 14
BUS I/F UNIT 20-1
BUS I/F UNIT 20-2
BUS I/F UNIT 20-3
BUS I/F UNIT 20-4
16 (COMMON MEMORY BUS)

FIG. 1