US008356483B2

(12) **United States Patent**
Petty et al.

(10) **Patent No.: US 8,356,483 B2**
(45) **Date of Patent: Jan. 22, 2013**

(54) **GAS TURBINE ENGINE SYSTEMS INVOLVING VARIABLE NOZZLES WITH SLIDING DOORS**

(75) Inventors: **Dale William Petty**, Wallingford, CT (US); **Shawn M. McMahon**, Manchester, CT (US); **Michael Joseph Murphy**, Vernon, CT (US); **Sean P. Zamora**, Coventry, CT (US); **Timothy A. Swanson**, Coventry, CT (US)

(73) Assignee: **United Technologies Corp**, Hartford, CT (US)

(*) Notice: Subject to any disclaimer, the term of this patent is extended or adjusted under 35 U.S.C. 154(b) by 952 days.

(21) Appl. No.: **12/100,470**

(22) Filed: **Apr. 10, 2008**

(65) **Prior Publication Data**

US 2009/0255269 A1 Oct. 15, 2009

(51) **Int. Cl.**
F02K 1/06 (2006.01)

(52) **U.S. Cl.** **60/770**; 60/771; 60/231; 60/232; 60/226.1; 60/226.3; 239/265.17; 239/265.19; 239/265.35

(58) **Field of Classification Search** 60/771, 60/770, 232, 226.1, 226.3, 231; 239/265.19, 239/265.35, 265.17
See application file for complete search history.

(56) **References Cited**

U.S. PATENT DOCUMENTS

2,737,015	A	3/1956	Wright	
3,386,658	A *	6/1968	Mehr	239/127.3
3,449,914	A *	6/1969	Brown	405/215
3,841,091	A	10/1974	Sargisson	
4,068,469	A *	1/1978	Adamson	60/204
4,175,384	A *	11/1979	Wagenknecht et al.	60/226.3
5,307,624	A *	5/1994	Even-Nur et al.	60/226.3
5,694,767	A *	12/1997	Vdoviak et al.	60/226.3
5,778,659	A	7/1998	Duesler et al.	
5,833,140	A	11/1998	Loffredo et al.	
5,893,518	A	4/1999	Bruchez, Jr. et al.	
6,901,739	B2 *	6/2005	Christopherson	60/226.3
6,938,408	B2	9/2005	Lair	
7,004,047	B2	2/2006	Rey et al.	
7,093,793	B2	8/2006	Lair	
7,134,271	B2	11/2006	Baughman et al.	
7,174,704	B2	2/2007	Renggli	
7,178,338	B2	2/2007	Whurr	
7,216,476	B2	5/2007	Fink	
7,770,381	B2 *	8/2010	Johnson et al.	60/263
2006/0064960	A1 *	3/2006	Johnson	60/226.3
2007/0018034	A1	1/2007	Dickau	

FOREIGN PATENT DOCUMENTS

CA	1029201	4/1978
DE	1081277	5/1960
EP	1619376	1/2006
FR	2184021	12/1973
FR	2499158	8/1982
GB	862405	3/1961

OTHER PUBLICATIONS

European Search Report, dated Aug. 12, 2009, EP Application No. 09250923.1-2315.

Anders Hasselrot, Bjorn Montgomerie, "An Overview of Propulsion Systems for Flying Vehicles," FOI Swedish Defence Research Agency, Jun. 2005.

* cited by examiner

Primary Examiner — William H Rodriguez
Assistant Examiner — Steven Sutherland
(74) *Attorney, Agent, or Firm* — Carlson, Gaskey & Olds

(57) **ABSTRACT**

A nozzle assembly for a gas turbine engine includes a door axially slidable relative to a passage in communication with a secondary flow path to regulate the secondary flow though the passage.
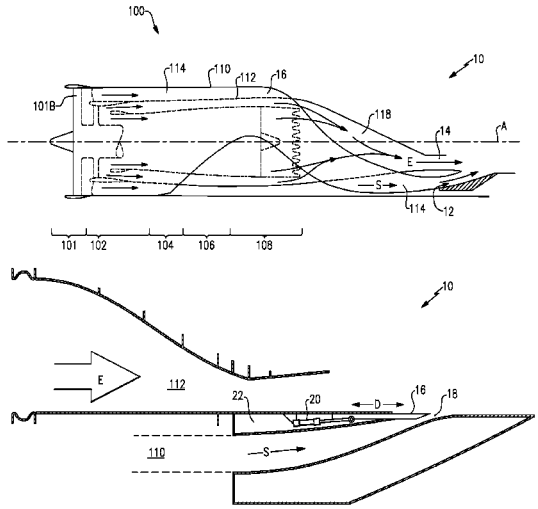
26 Claims, 4 Drawing Sheets