US008149183B2

(12) **United States Patent**
Fricke et al.

(10) **Patent No.: US 8,149,183 B2**
(45) **Date of Patent: Apr. 3, 2012**

(54) **DISPLAY**

(75) Inventors: **Peter James Fricke**, Corvallis, OR (US); **Alan R. Arthur**, Salem, OR (US)

(73) Assignee: **Hewlett-Packard Development Company, L.P.**, Houston, TX (US)

(*) Notice: Subject to any disclaimer, the term of this patent is extended or adjusted under 35 U.S.C. 154(b) by 1242 days.

(21) Appl. No.: **11/831,014**

(22) Filed: **Jul. 31, 2007**

(65) **Prior Publication Data**

US 2009/0033587 A1 Feb. 5, 2009

(51) **Int. Cl.**
G09G 5/00 (2006.01)

(52) **U.S. Cl.** **345/4**; 345/1.1; 345/1.3; 345/5; 345/901; 345/903; 434/317

(58) **Field of Classification Search** 345/1.1–1.3, 345/4–6, 901, 903; 434/317
See application file for complete search history.

(56) **References Cited**

U.S. PATENT DOCUMENTS

3,662,807 A * 5/1972 Miller 160/135
4,597,635 A 7/1986 Hoshikawa
4,865,111 A * 9/1989 Perutz 160/135
4,979,554 A * 12/1990 Nelson 160/135
5,034,736 A 7/1991 Bennett et al.
5,197,280 A * 3/1993 Carpenter et al. 60/204
5,416,494 A * 5/1995 Yokota et al. 345/79
5,436,744 A 7/1995 Arledge et al.
5,609,488 A * 3/1997 McTaggart 434/317
5,703,436 A * 12/1997 Forrest et al. 313/506
5,803,748 A * 9/1998 Maddrell et al. 434/317
5,818,165 A 10/1998 Malhi
6,108,484 A * 8/2000 Lim et al. 386/46
6,229,502 B1 * 5/2001 Schwab 345/1.1
6,299,337 B1 10/2001 Bachl et al.
6,365,270 B2 * 4/2002 Forrest et al. 428/336
6,850,212 B1 2/2005 Aitken et al.
6,850,312 B2 2/2005 Jacobsen et al.
6,972,732 B1 * 12/2005 Nishikawa 345/1.1
7,249,324 B2 * 7/2007 Nakamura et al. 715/776
2003/0160735 A1 8/2003 Lee et al.
2004/0005438 A1 * 1/2004 Lichodziejewski et al. .. 428/166
2005/0110702 A1 * 5/2005 Aoki et al. 345/30
2006/0125802 A1 * 6/2006 Liang et al. 345/173
2006/0214922 A1 * 9/2006 Moore et al. 345/173

* cited by examiner

Primary Examiner — Lun-Yi Lao
Assistant Examiner — Sosina Abebe

(57) **ABSTRACT**

Various embodiments and methods relating to driving a stacked arrangement of display panels are disclosed.
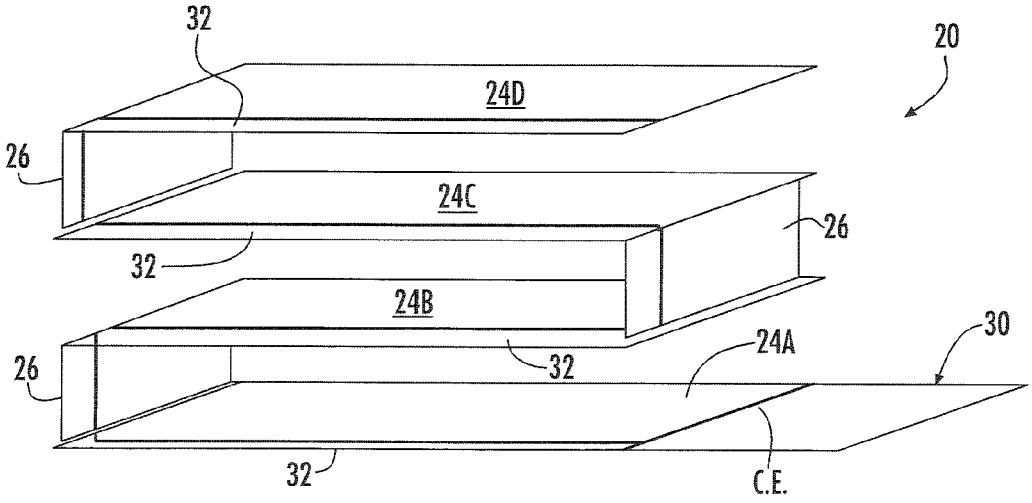
13 Claims, 2 Drawing Sheets