United States Patent [19]

Miller

[11] **Patent Number: 4,938,583**

[45] **Date of Patent: Jul. 3, 1990**

[54] **CONTACT LENS AND METHOD OF MAKING SAME**

[76] Inventor: **Gregory N. Miller,** 11 Bernard Ave., Toronto, Ontario, Canada, M5R-1R3

[21] Appl. No.: **403,167**

[22] Filed: **Sep. 5, 1989**

Related U.S. Application Data

[63] Continuation of Ser. No. 296,339, Jan. 9, 1989, abandoned, which is a continuation of Ser. No. 869,728, Jun. 2, 1986, abandoned.

[51] **Int. Cl.**[5] **G02C 7/04;** G02C 7/06; B24B 1/00

[52] **U.S. Cl.** ..... **351/161;** 351/168; 51/284 R

[58] **Field of Search** ..... 351/161, 168, 169, 171; 51/284 R-284 E; 350/320

[56] **References Cited**

U.S. PATENT DOCUMENTS

1,473,360	11/1923	Styll	51/284 R
2,112,836	4/1938	Evans	351/169
3,279,878	10/1966	Long	351/168
3,913,274	10/1975	Raiford et al.	51/284 R
4,202,848	5/1980	Neefe	51/284 R
4,324,461	4/1982	Salvatori	351/161
4,618,229	10/1986	Sacobstein et al.	351/161

Primary Examiner—Eugene R. LaRoche
Assistant Examiner—Ronald M. Kachmarik

[57] **ABSTRACT**

A bifocal contact lens is made by cutting a first convex surface on the anterior surface of the lens, the first convex surface being a near distance corrective surface and the posterior surface being shaped to the eye, so that substantially the entirety of the anterior surface is formed by the first corrective surface. A second corrective surface is cut after the lens is eccentrically offset from the axis of rotation of the first surface, the second surface being of greater radius then that of the first surface and the two corrective surfaces forming substantially the entirety of the anterior surface of the lens with the lens being devoid of ballasting other than that provided by the eccentric thinning of the lens.
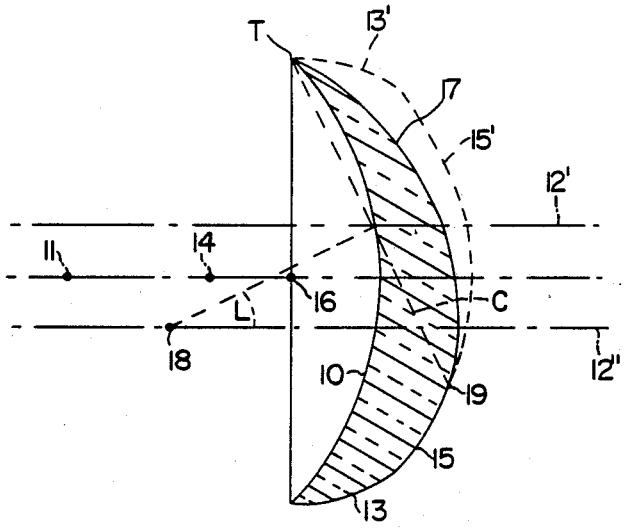
6 Claims, 2 Drawing Sheets