US009636683B2

(12) **United States Patent**
Tallent et al.

(10) **Patent No.: US 9,636,683 B2**
(45) **Date of Patent: May 2, 2017**

(54) **RING FOR GRINDING MILL**

(75) Inventors: **Brian Tallent**, Franklin, TN (US); **Armond Groves**, Nashville, TN (US)

(73) Assignee: **Magotteaux International S.A.**, Vaux-sous-Chèvremont (BE)

(*) Notice: Subject to any disclaimer, the term of this patent is extended or adjusted under 35 U.S.C. 154(b) by 651 days.

(21) Appl. No.: **13/637,477**

(22) PCT Filed: **Mar. 31, 2010**

(86) PCT No.: **PCT/EP2010/054278**

§ 371 (c)(1),
(2), (4) Date: **Feb. 6, 2013**

(87) PCT Pub. No.: **WO2011/120568**

PCT Pub. Date: **Oct. 6, 2011**

(65) **Prior Publication Data**

US 2013/0126649 A1 May 23, 2013

(51) **Int. Cl.**
B02C 15/00 (2006.01)
B02C 15/02 (2006.01)

(52) **U.S. Cl.**
CPC ***B02C 15/003*** (2013.01); ***B02C 15/02*** (2013.01)

(58) **Field of Classification Search**
CPC B02C 15/003; B02C 15/02
USPC 241/129, 131
See application file for complete search history.

(56) **References Cited**

U.S. PATENT DOCUMENTS

876,765 A * 1/1908 Besser 241/129
1,526,618 A * 2/1925 Wickland 241/60
1,573,191 A * 2/1926 Raymond et al. 241/58
2,958,473 A * 11/1960 Massie 241/108
3,337,142 A 8/1967 Williams
3,366,338 A 1/1968 Barton
4,022,387 A 5/1977 Williams
4,682,738 A * 7/1987 Chang 241/56
4,874,135 A * 10/1989 Provost B02C 15/001 241/103
5,054,697 A * 10/1991 Provost B02C 15/001 241/119
5,238,196 A * 8/1993 Chang 241/56
5,549,251 A * 8/1996 Provost B02C 15/001 241/119
5,607,111 A * 3/1997 Brundiek B02C 15/001 241/121
5,908,167 A * 6/1999 Provost B02C 15/001 241/119
6,079,646 A * 6/2000 Keyssner B02C 15/001 241/107
7,448,565 B2 * 11/2008 Farris B02C 15/001 209/139.1
7,513,295 B2 4/2009 Poncin et al.
8,336,796 B2 * 12/2012 Wark 241/119
(Continued)

FOREIGN PATENT DOCUMENTS

EP 1365863 A1 12/2003

Primary Examiner — Faye Francis

(74) *Attorney, Agent, or Firm* — Reinhart Boerner Van Deuren P.C.

(57) **ABSTRACT**

A segmented grinding ring for centrifugal vertical roller mills is provided. The segmented grinding ring includes multiple cast segments which may be vaulted together using pin rods and shims to form a continuous ring. The segmented grinding ring enables the manufacture of the segments in a cast composite material.
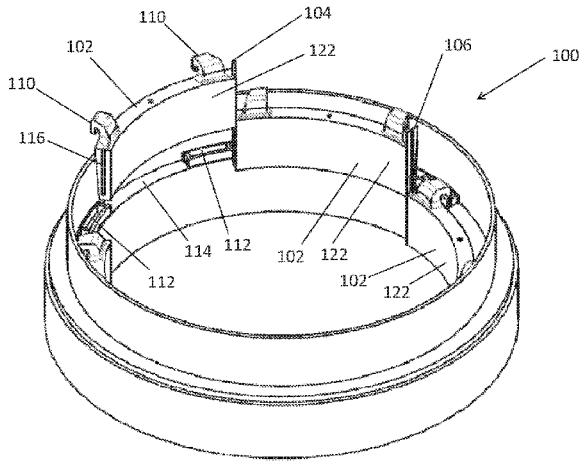
15 Claims, 4 Drawing Sheets