US005928283A

United States Patent [19]

Gross et al.

[11] **Patent Number: 5,928,283**

[45] **Date of Patent: Jul. 27, 1999**

[54] **TELESCOPIC DEVICE FOR AN INTRAOCULAR LENS**

[75] Inventors: **Yosef Gross**, Moshav Mazor; **Isaac Lipshitz**, Herzelia Pituach; **Dotan Gedeon**, Yehud, all of Israel

[73] Assignee: **Visioncare Ltd**, Yehud, Israel

[21] Appl. No.: **08/882,972**

[22] Filed: **Jun. 26, 1997**

[51] **Int. Cl.**[6] **A61F 2/16**

[52] **U.S. Cl.** **623/6**

[58] **Field of Search** 623/6

[56] **References Cited**

U.S. PATENT DOCUMENTS

4,074,368	2/1978	Levy, Jr. et al.	623/6
4,172,297	10/1979	Schlegel	623/6
4,648,878	3/1987	Kelman	623/6
4,666,446	5/1987	Koziol et al.	623/6
4,759,761	7/1988	Portroy	623/6
4,863,468	9/1989	Feinbloom et al.	623/6
4,892,543	1/1990	Turley	623/6
5,201,762	4/1993	Hauber	623/6
5,275,623	1/1994	Sarfarazi	623/6
5,354,335	10/1994	Lipshitz et al.	623/6
5,391,202	2/1995	Lipshitz et al.	623/6
5,683,457	11/1997	Gupta et al.	623/6

FOREIGN PATENT DOCUMENTS

212616	3/1987	European Pat. Off. .	
97/10527	3/1997	WIPO	623/6

Primary Examiner—David H. Willse
Attorney, Agent, or Firm—Darby & Darby

[57] **ABSTRACT**

An intraocular lens implant for implantation in the interior of a human eye comprising a telescope body having an anterior end and a posterior end and including at least one window sealed to the telescope body at at least one of the anterior end and the posterior end and at least two lenses disposed within the telescope body intermediate the anterior end and the posterior end.
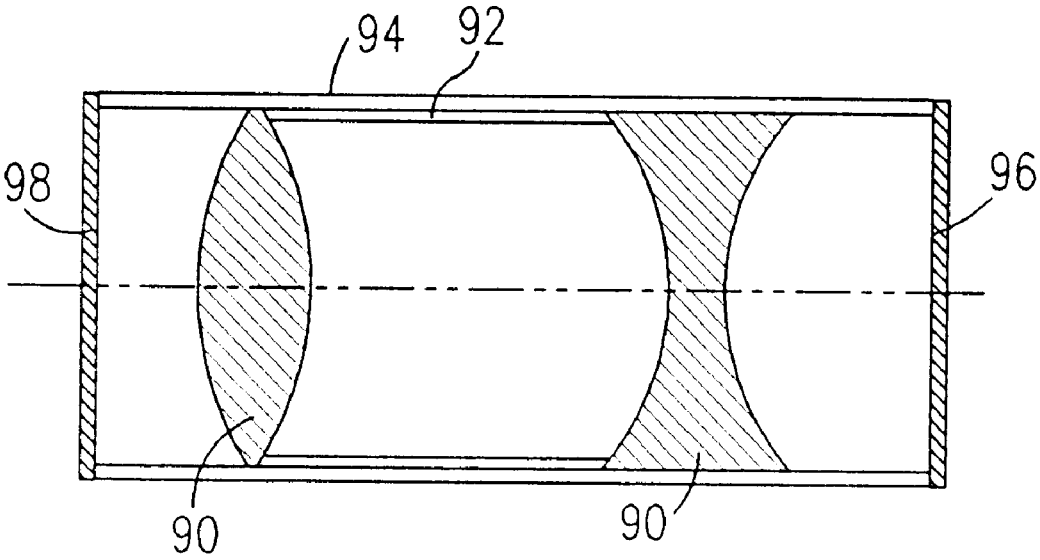
14 Claims, 4 Drawing Sheets