Nov. 26, 1957 J. GASSMANN ET AL 2,814,283

VALVE CONTROL MECHANISM, PARTICULARLY FOR HIGH SPEED INTERNAL COMBUSTION ENGINES

Filed April 7, 1955 2 Sheets-Sheet 1

Fig. 1

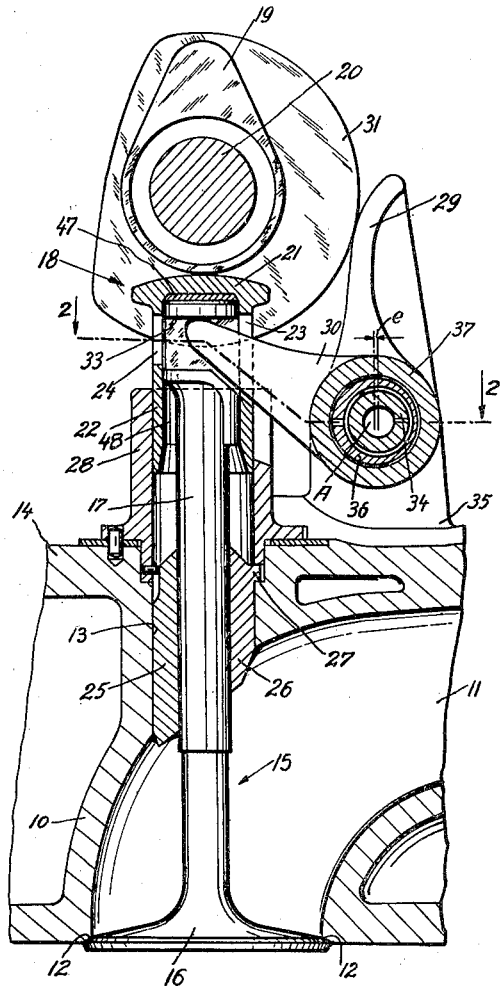

Inventors
JOHANNES GASSMANN AND
MANFRED K. LORSCHEIDT
BY Dicke and Craig.
ATTORNEYS.