May 12, 1970 R. R. BROWN 3,511,583

MAGNETIC FLUID ACTUATING PUMP

Filed Sept. 24, 1968

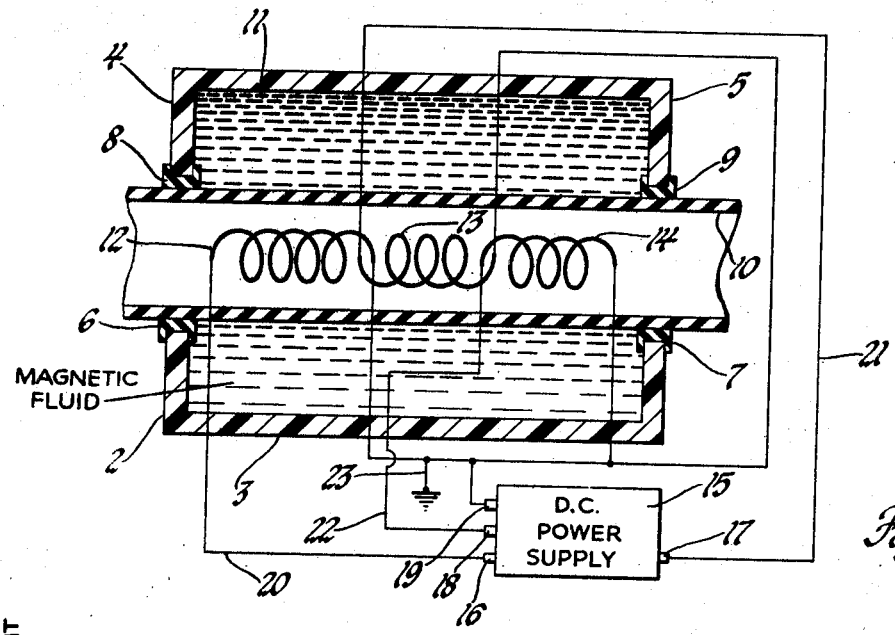

Fig. 1

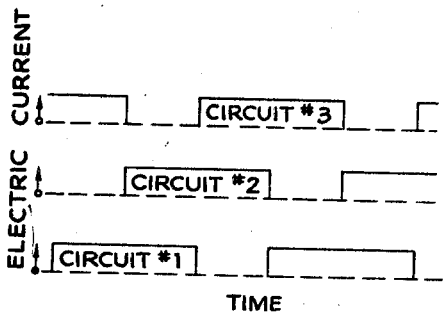

Fig. 2

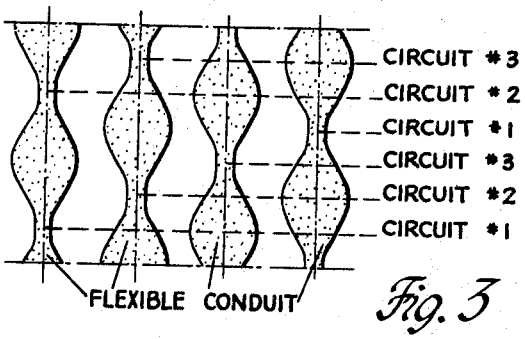

Fig. 3

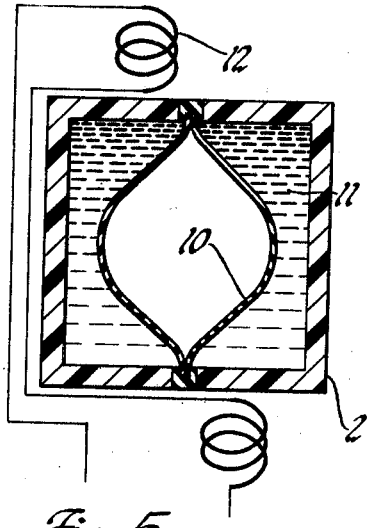

Fig. 5

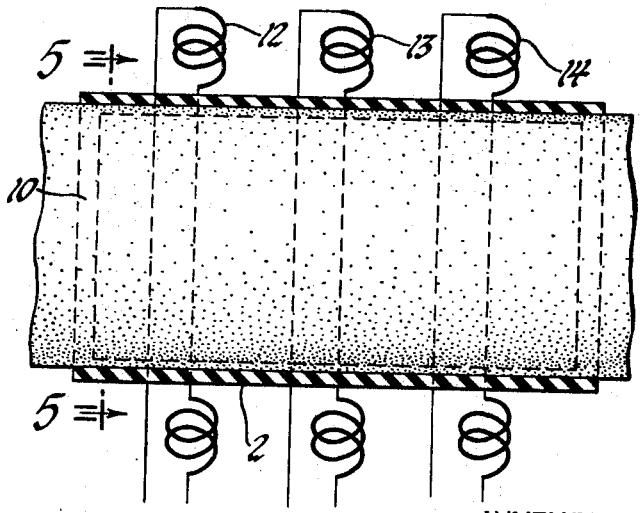

Fig. 4

INVENTOR.
Ralph R. Brown

BY
Frank J. Soucek
ATTORNEY