US009411083B2

(12) **United States Patent**
Angelini et al.

(10) **Patent No.: US 9,411,083 B2**
(45) **Date of Patent: Aug. 9, 2016**

(54) **LIGHT MIXING LENSES AND SYSTEMS**

(71) Applicants: **Marco Angelini**, VIa Milano (IT); **Claudia Bigliatti**, Trino (IT); **Ernesto Grossi**, Milan (IT)

(72) Inventors: **Marco Angelini**, VIa Milano (IT); **Claudia Bigliatti**, Trino (IT); **Ernesto Grossi**, Milan (IT)

(73) Assignee: **Fraen Corporation**, Reading, MA (US)

(*) Notice: Subject to any disclaimer, the term of this patent is extended or adjusted under 35 U.S.C. 154(b) by 0 days.

(21) Appl. No.: **13/729,459**

(22) Filed: **Dec. 28, 2012**

(65) **Prior Publication Data**

US 2013/0215636 A1 Aug. 22, 2013

Related U.S. Application Data

(60) Provisional application No. 61/582,083, filed on Dec. 30, 2011.

(51) **Int. Cl.**

F21V 7/04	(2006.01)
H01L 33/00	(2010.01)
F21V 8/00	(2006.01)
G02B 27/09	(2006.01)
F21V 7/00	(2006.01)

(52) **U.S. Cl.**

CPC ***G02B 6/0001*** (2013.01); ***F21V 7/0091*** (2013.01); ***G02B 6/0008*** (2013.01); ***G02B 6/0096*** (2013.01); ***G02B 27/0955*** (2013.01); ***G02B 27/0994*** (2013.01)

(58) **Field of Classification Search**

CPC G02B 27/0994; G02B 19/0066; G02B 19/0061; G02B 6/0028; G02B 21/208; F21V 7/0091; F21V 5/008

USPC 362/555, 558, 582

See application file for complete search history.

(56) **References Cited**

U.S. PATENT DOCUMENTS

3,784,277	A *	1/1974	Baker	359/211.1
6,056,426	A	5/2000	Jenkins	
6,200,002	B1	3/2001	Marshall et al.	
6,219,480	B1	4/2001	Cassarly et al.	
6,547,416	B2	4/2003	Pashley et al.	
6,575,580	B2	6/2003	Okamori et al.	
6,819,505	B1 *	11/2004	Cassarly et al.	359/726

(Continued)

FOREIGN PATENT DOCUMENTS

EP	2211089 A1	7/2010
EP	2211090 A1	7/2010

(Continued)

OTHER PUBLICATIONS

PCT International Preliminary Report on Patentability and Written Opinion for PCT/EP2012/077043 mailed Jul. 10, 2014 (19 sheets).

(Continued)

Primary Examiner — Peggy Neils
Assistant Examiner — Alexander Garlen
(74) *Attorney, Agent, or Firm* — Reza Mollaaghababa; Thomas Engellenner; Pepper Hamilton LLP

(57) **ABSTRACT**

Lighting modules and lighting systems containing one or more lighting modules, and associated methods, are provided that receive light from one or more light sources for projecting it to a target surface, e.g., in a uniform, patterned, or other controlled manner. In various embodiments, the lighting modules and lighting systems can be used to mix the light generated by one or more sources.
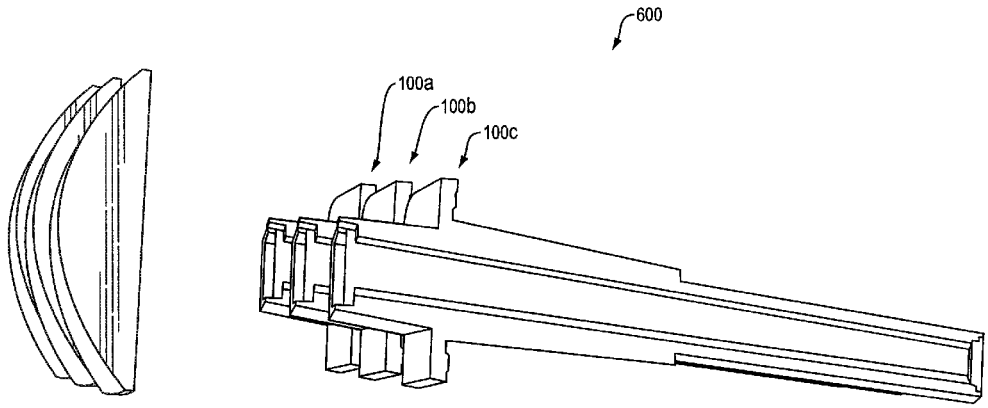
19 Claims, 16 Drawing Sheets