US009409383B2

(12) **United States Patent**
Feinstein et al.

(10) **Patent No.: US 9,409,383 B2**
(45) **Date of Patent: Aug. 9, 2016**

(54) **LAYER-SPECIFIC ENERGY DISTRIBUTION DELAMINATION**

(75) Inventors: **Casey J. Feinstein**, San Jose, CA (US); **Silvio Grespan**, Shanghai (CN); **Kuo-Hua Sung**, Cupertino, CA (US); **John Z. Zhong**, Cupertino, CA (US); **Lynn Youngs**, Cupertino, CA (US)

(73) Assignee: **APPLE INC.**, Cupertino, CA (US)

(*) Notice: Subject to any disclaimer, the term of this patent is extended or adjusted under 35 U.S.C. 154(b) by 860 days.

(21) Appl. No.: **12/408,636**

(22) Filed: **Mar. 20, 2009**

(65) **Prior Publication Data**

US 2010/0154992 A1 Jun. 24, 2010

Related U.S. Application Data

(60) Provisional application No. 61/140,072, filed on Dec. 22, 2008.

(51) **Int. Cl.**
B29C 63/00 (2006.01)
B32B 43/00 (2006.01)
(Continued)

(52) **U.S. Cl.**
CPC ***B32B 43/006*** (2013.01); ***B23K 26/00*** (2013.01); ***B23K 26/0054*** (2013.01);
(Continued)

(58) **Field of Classification Search**
CPC B32B 7/06; B32B 43/00; B32B 2310/022; B32B 2310/028; B32B 2310/0806; B32B 2310/0825; B32B 2310/0843; B32B 2310/0862; B32B 38/0004; B32B 2038/045; B32B 38/10; B32B 38/16; B26D 7/086; B26D 7/10; B26D 2001/0013; B26D 2001/006; B26D 1/547; B26D 3/28; B26D 3/282; G02F 1/1309; G02F 1/13338; G02F 1/133305; G02F 1/133308; B23K 26/00; B23K 26/0054; B23K 26/0063; B23K 26/06; B23K 26/0604; B23K 26/50; B23K 26/57; B23K 26/0608; B23K 26/0648
USPC 156/701, 711, 712, 714, 717, 752, 753, 156/761, 762, 765, 710, 750, 919
See application file for complete search history.

(56) **References Cited**

U.S. PATENT DOCUMENTS

2,976,628 A * 3/1961 Breslow 40/638
3,090,392 A * 5/1963 Libby 134/125
(Continued)

FOREIGN PATENT DOCUMENTS

CN 101183285 A * 5/2008
JP 2000-163031 A 6/2000
(Continued)

OTHER PUBLICATIONS

Chen et al., "CN 101183285, machine translation", published May 21, 2008.*
(Continued)

Primary Examiner — Alex Efta
(74) *Attorney, Agent, or Firm* — Brownstein Hyatt Farber Schreck, LLP

(57) **ABSTRACT**

Delamination of a laminated multilayer stack is provided by generating a layer-specific energy distribution in the stack during delamination. A localized energy transferrer can generate localized heating, cooling heating, cooling, or other form of energy absorption or transmission, in a bonding layer of a multilayer stack. Localized energy transfer can include thermal energy transfer, such as heating and/or cooling, acoustic energy transfer, such as applying ultrasonic energy, electromagnetic energy transfer, such as applying laser light, directed microwaves, etc. Localized energy transfer can generate a layer-specific energy distribution that can weaken the bonding layer while reducing damage to other layers of the stack.
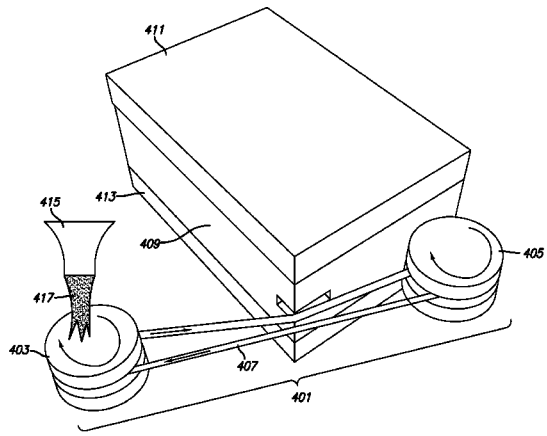
29 Claims, 14 Drawing Sheets