US009408583B2

(12) **United States Patent**
Soluri et al.

(10) **Patent No.: US 9,408,583 B2**
(45) **Date of Patent: Aug. 9, 2016**

(54) **PORTABLE GAMMA CAMERA**

(71) Applicant: **CONSIGLIO NAZIONALE DELLE RICERCHE (CNR)**, Rome (IT)

(72) Inventors: **Alessandro Soluri**, Rome (IT); **Roberto Massari**, Rome (IT)

(73) Assignee: **CONSIGLIO NAZIONALE DELLE RICERCHE (CNR)**, Rome (IT)

(*) Notice: Subject to any disclaimer, the term of this patent is extended or adjusted under 35 U.S.C. 154(b) by 0 days.

(21) Appl. No.: **14/435,893**

(22) PCT Filed: **Oct. 15, 2013**

(86) PCT No.: **PCT/IT2013/000285**
§ 371 (c)(1),
(2) Date: **Apr. 15, 2015**

(87) PCT Pub. No.: **WO2014/061047**
PCT Pub. Date: **Apr. 24, 2014**

(65) **Prior Publication Data**

US 2015/0282773 A1 Oct. 8, 2015

(30) **Foreign Application Priority Data**

Oct. 16, 2012 (IT) RM2012A0491

(51) **Int. Cl.**

G01T 1/164	(2006.01)
A61B 6/00	(2006.01)
A61B 6/06	(2006.01)
A61B 6/10	(2006.01)
H04N 5/225	(2006.01)

(52) **U.S. Cl.**
CPC ***A61B 6/4258*** (2013.01); ***A61B 6/06*** (2013.01); ***A61B 6/107*** (2013.01); ***A61B 6/4291*** (2013.01); ***A61B 6/4405*** (2013.01); ***A61B 6/508*** (2013.01); ***H04N 5/2252*** (2013.01)

(58) **Field of Classification Search**
CPC ... G01T 1/2985; G01T 1/1642; G01T 1/1644; G01T 1/202; G01T 1/172
See application file for complete search history.

(56) **References Cited**

U.S. PATENT DOCUMENTS

6,388,258	B1 *	5/2002	Berlad et al.	250/363.07
8,450,694	B2 *	5/2013	Baviera et al.	250/363.04
2007/0152161	A1 *	7/2007	Olcott et al.	250/363.07
2008/0062141	A1 *	3/2008	Chandhri	345/173
2010/0090120	A1	4/2010	Soluri et al.	
2011/0208049	A1 *	8/2011	Tumer	600/436
2013/0320212	A1 *	12/2013	Valentino et al.	250/336.1

FOREIGN PATENT DOCUMENTS

EP	1 967 868	A2	9/2008
WO	98/48300	A2	10/1998

OTHER PUBLICATIONS

International Search Report, dated Feb. 4, 2014, from corresponding PCT application.

* cited by examiner

Primary Examiner — David Porta
Assistant Examiner — Mamadou Faye
(74) *Attorney, Agent, or Firm* — Young & Thompson

(57) **ABSTRACT**

A portable gamma camera includes a containment body (**2**), a scintillation measuring structure (**3**) housed in the containment body (**2**), a collimator (**4**) associated with the measuring structure (**3**), a display (**5**) positioned on the containment body (**2**) and an electronic controller unit (**6**), operating between the measuring structure (**3**) and the display (**5**) for generating on the display (**5**) images representing the radiation intercepted by the measuring structure (**3**).
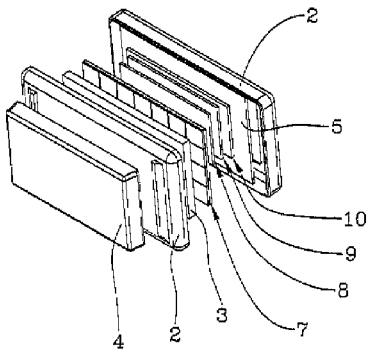
11 Claims, 4 Drawing Sheets