US007703383B2

(12) **United States Patent**
Knitel

(10) **Patent No.: US 7,703,383 B2**
(45) **Date of Patent: Apr. 27, 2010**

(54) **CAPPUCCINO PREPARATION**

(75) Inventor: **Joseph Theodoor Knitel**, Utrecht (NL)

(73) Assignee: **Sara Lee/DE N.V.**, Utrecht (NL)

(*) Notice: Subject to any disclaimer, the term of this patent is extended or adjusted under 35 U.S.C. 154(b) by 851 days.

(21) Appl. No.: **10/807,216**

(22) Filed: **Mar. 22, 2004**

(65) **Prior Publication Data**

US 2004/0241307 A1 Dec. 2, 2004

Related U.S. Application Data

(63) Continuation of application No. PCT/NL02/00614, filed on Sep. 23, 2002.

(30) **Foreign Application Priority Data**

Sep. 21, 2001 (NL) 1019013

(51) **Int. Cl.**
A47J 31/06 (2006.01)

(52) **U.S. Cl.** ..... **99/302 R**; 99/295

(58) **Field of Classification Search** ..... 99/295, 99/302 R, 287, 316, 323.3
See application file for complete search history.

(56) **References Cited**

U.S. PATENT DOCUMENTS

3,450,024 A *	6/1969	Martin		99/295
5,150,645 A	9/1992	Schiettecatte		
5,913,962 A *	6/1999	Gasser et al.		99/293
6,009,792 A *	1/2000	Kraan		99/295
6,748,850 B1 *	6/2004	Kraan		99/289 R

FOREIGN PATENT DOCUMENTS

DE	40 37 366 A1	5/1992
DE	42 13 895 A1	11/1992
DE	4424835	1/1996
EP	0904717	9/1998
GB	989996	4/1965
JP	11-120434	4/1999
NL	7215523	5/1974
NL	1013270	4/2001
WO	WO 89/12416 A2	12/1989
WO	WO 2004/056246 A1	7/2004

* cited by examiner

Primary Examiner—Reginald L Alexander
(74) *Attorney, Agent, or Firm*—Foley & Lardner, LLP

(57) **ABSTRACT**

Method for preparing cappuccino wherein at least one coffee pad filled with ground coffee and an instant and/or liquid creamer are utilized, the method further comprising the following method-steps: hot water is forced under pressure through the coffee pad for obtaining coffee extract;—the coffee extract is supplied under pressure to at least one nozzle for obtaining a coffee extract jet, the coffee extract jet is aimed at a first buffer reservoir already filled with the creamer so that in the first buffer reservoir the cappuccino is formed and the cappuccino is discharged from the first buffer reservoir.
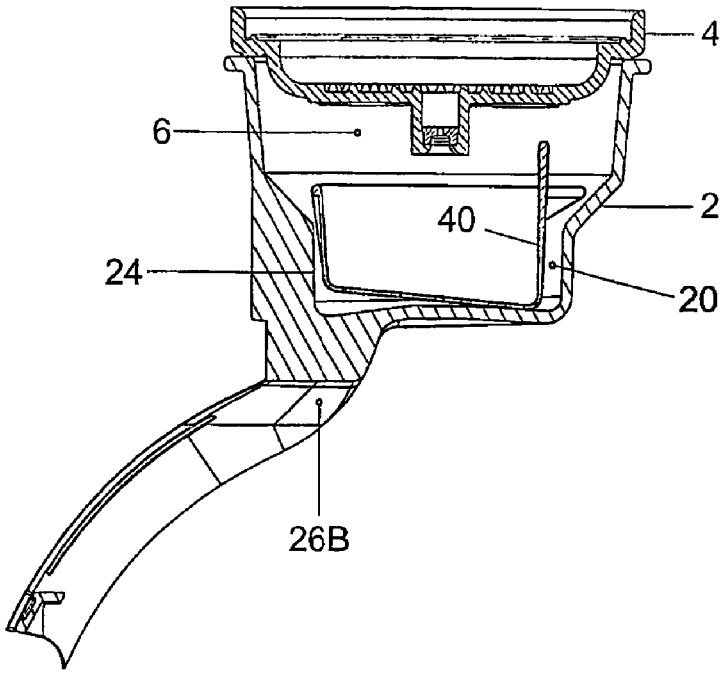
13 Claims, 4 Drawing Sheets