US008899982B2

(12) **United States Patent**
Damstra et al.

(10) **Patent No.: US 8,899,982 B2**
(45) **Date of Patent: Dec. 2, 2014**

(54) **IMPLANT WITH STRUCTURE FOR SECURING A POROUS PORTION**

(75) Inventors: **Robert Damstra**, San Marcos, CA (US); **Joseph A. Salvi**, Chula Vista, CA (US); **Shahram Zamani**, Poway, CA (US); **Mojtaba Esfahani**, Del Mar, CA (US)

(73) Assignee: **Zimmer Dental, Inc.**, Carlsbad, CA (US)

(*) Notice: Subject to any disclaimer, the term of this patent is extended or adjusted under 35 U.S.C. 154(b) by 540 days.

(21) Appl. No.: **12/167,060**

(22) Filed: **Jul. 2, 2008**

(65) **Prior Publication Data**

US 2010/0003640 A1 Jan. 7, 2010

(51) **Int. Cl.**
A61C 8/00 (2006.01)
A61F 2/28 (2006.01)

(52) **U.S. Cl.**
CPC ***A61C 8/0018*** (2013.01); ***A61C 8/0012*** (2013.01); ***A61C 8/0022*** (2013.01)
USPC **433/174**; 623/16.11

(58) **Field of Classification Search**
USPC 433/172–176, 201.1, 202.1, 215, 220, 433/224; 623/16.11, 20.34, 20.36, 23.34, 623/23.46; 606/301, 306, 310, 316, 321, 606/328, 331, 232
See application file for complete search history.

(56) **References Cited**

U.S. PATENT DOCUMENTS

2,721,387	A	10/1955	Ashuckian
3,314,420	A	4/1967	Smith et al.
3,423,830	A	1/1969	Halpern et al.
3,423,831	A	1/1969	Semmelman
3,497,953	A	3/1970	Weissman
3,685,115	A	8/1972	Scott
3,713,860	A	1/1973	Auskern
3,740,851	A	6/1973	Weissman
3,797,113	A	3/1974	Brainin
3,849,887	A	11/1974	Brainin
3,896,547	A	7/1975	Kulwiec
3,905,109	A	9/1975	Cohen et al.
3,906,550	A	9/1975	Rostoker
3,919,773	A	11/1975	Freeman
3,934,347	A	1/1976	Lash et al.

(Continued)

FOREIGN PATENT DOCUMENTS

EP	0266313	5/1988
EP	0271236	6/1988

(Continued)

OTHER PUBLICATIONS

International Search Report from related application PCT/US2009/048469, Oct. 19, 2009, 9 pages.

(Continued)

Primary Examiner — Heidi M Eide
(74) *Attorney, Agent, or Firm* — Schwegman Lundberg & Woessner, P.A.

(57) **ABSTRACT**

An implant includes a head portion, an intermediate portion and an initially separate stem portion configured to engage the head portion so that at least the head portion and the stem portion cooperatively secure the intermediate portion on the implant. The implant may also include a locking mechanism configured to secure the head portion to the stem portion by a press fit or a threaded connection. The intermediate portion may include a porous metal such as tantalum.
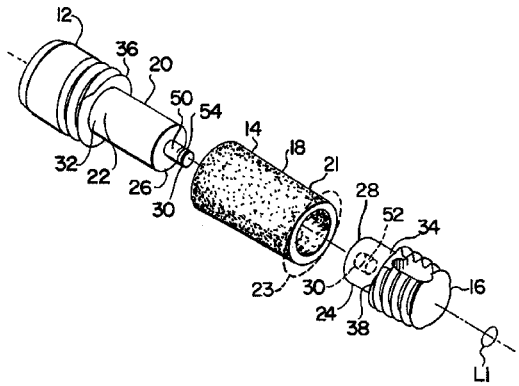
27 Claims, 3 Drawing Sheets