Sept. 3, 1968 R. E. BASCOM 3,399,782

BOOK ENDS

Filed Feb. 6, 1967

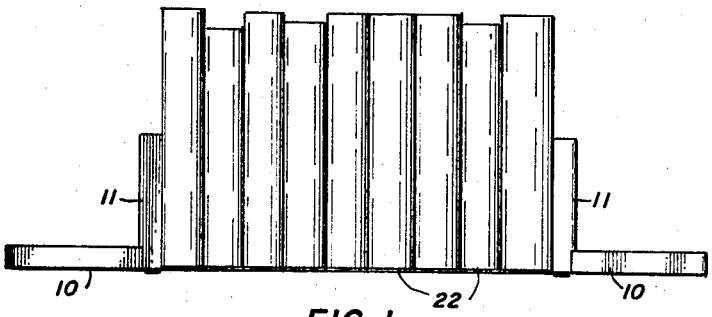

FIG. 1.

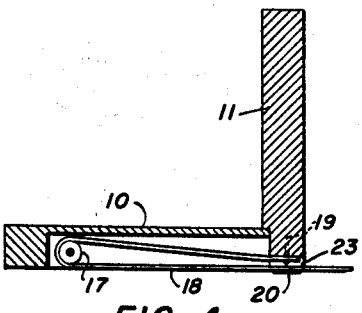

FIG. 4.

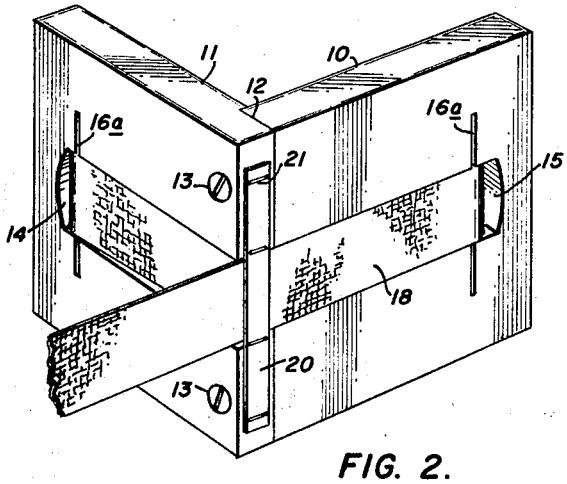

FIG. 2.

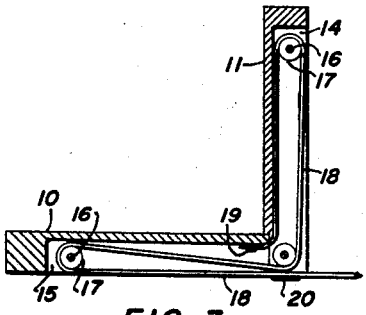

FIG. 3.

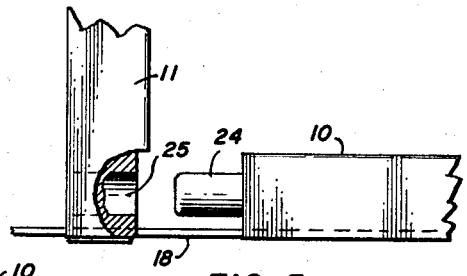

FIG. 5.

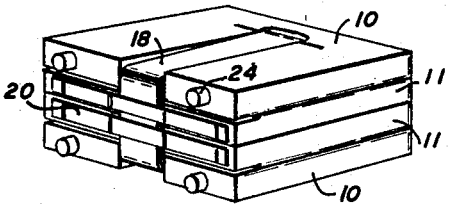

FIG. 6.

RAYMOND E. BASCOM
INVENTOR.

BY Herbert J. Brown
ATTORNEY