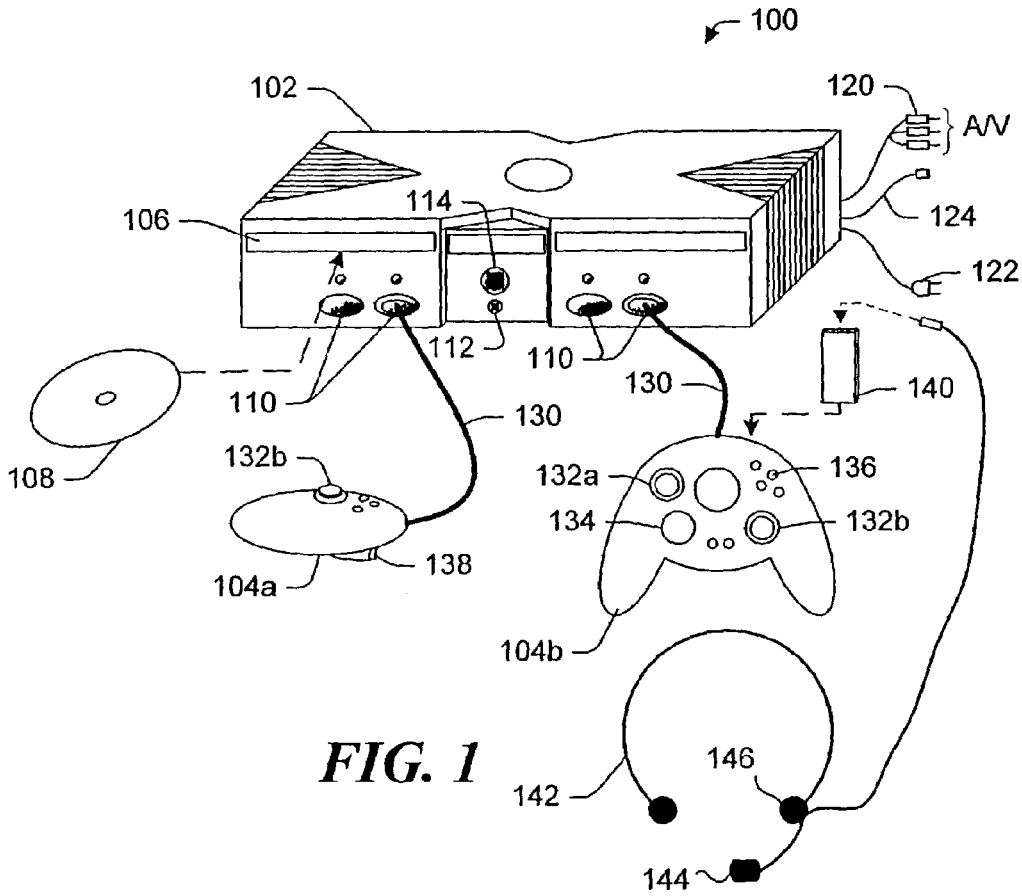
100
102
120
A/V
124
122
106
114
112
110
110
130
130
140
108
132b
132a
136
134
132b
138
104a
104b
142
146
144

FIG. 1

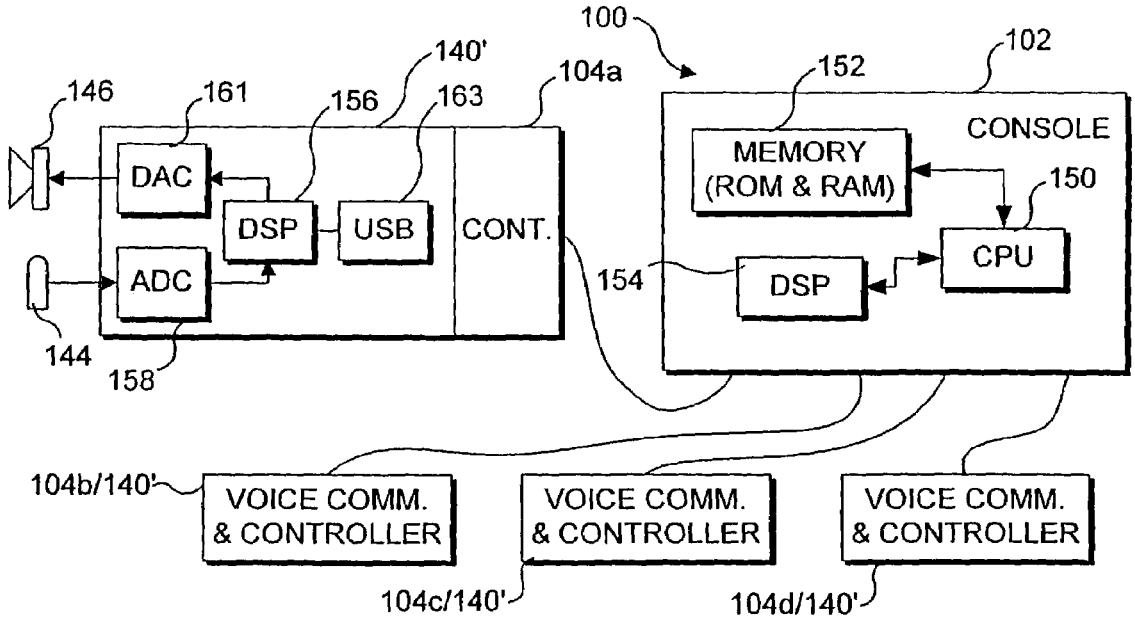
100
102
152
CONSOLE
MEMORY
(ROM & RAM)
150
CPU
154
DSP
146
161
156
140'
163
104a
DAC
DSP
USB
CONT.
ADC
144
158
104b/140'
VOICE COMM.
& CONTROLLER
VOICE COMM.
& CONTROLLER
VOICE COMM.
& CONTROLLER
104c/140'
104d/140'

FIG. 2