US005689282A

United States Patent [19]

Wolfs et al.

[11] Patent Number: 5,689,282

[45] Date of Patent: Nov. 18, 1997

[54] **DISPLAY DEVICE WITH COMPENSATION FOR STRAY CAPACITANCE**

[75] Inventors: **Peter B. A. Wolfs**; **Karel E. Kuijk**, both of Eindhoven, Netherlands

[73] Assignee: **U.S. Philips Corporation**, New York, N.Y.

[21] Appl. No.: **898,985**

[22] Filed: **Jun. 15, 1992**

[30] **Foreign Application Priority Data**

Sep. 7, 1991 [EP] European Pat. Off. 91201789

[51] **Int. Cl.**[6] **G09G 3/36**

[52] **U.S. Cl.** **345/100**; 345/96; 345/103

[58] **Field of Search** 340/784, 805; 359/55, 68; 345/91, 150, 99, 103, 208, 96

[56] **References Cited**

U.S. PATENT DOCUMENTS

4,317,115 2/1982 Kawakami et al. 340/805

4,602,292 7/1986 Togashi et al. 340/784

4,745,406 5/1988 Hayashi et al. 340/784

5,144,288 9/1992 Hamada et al. 359/68

FOREIGN PATENT DOCUMENTS

0295802 12/1988 European Pat. Off. .

0479552 4/1992 European Pat. Off. .

Primary Examiner—Kee M. Tung

Assistant Examiner—Matthew Luu

[57] **ABSTRACT**

When an active matrix LCD is driven while using inversion per n rows (n≧2), stripe effects occur. In the case of double line inversion this leads to stripes in the picture. This can be largely obviated by supplying a different selection voltage to at least the last row of the rows in a group of n rows.
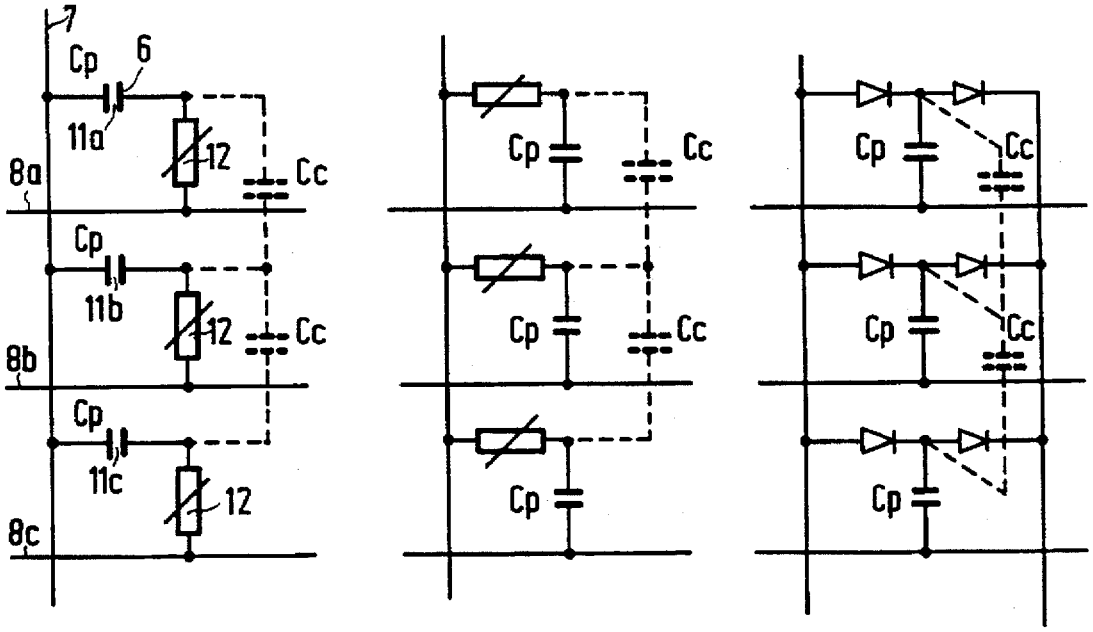
16 Claims, 2 Drawing Sheets