US006484782B1

(12) **United States Patent**
Lewis et al.

(10) **Patent No.: US 6,484,782 B1**
(45) **Date of Patent: Nov. 26, 2002**

(54) **GROUT APPLICATOR SYSTEM**

(75) Inventors: **Darrin Wayne Lewis**, Murray, UT (US); **Robert A. Marrott**, Heber, UT (US)

(73) Assignee: **MudMaster, L.L.C.**, Park City, UT (US)

(*) Notice: Subject to any disclaimer, the term of this patent is extended or adjusted under 35 U.S.C. 154(b) by 110 days.

(21) Appl. No.: **09/675,777**

(22) Filed: **Sep. 28, 2000**

Related U.S. Application Data

(60) Provisional application No. 60/187,740, filed on Mar. 8, 2000, and provisional application No. 60/156,763, filed on Sep. 29, 1999.

(51) **Int. Cl.**[7] **E04F 21/08**; B44C 7/06; F04B 44/08; B65D 88/54; B05B 11/02

(52) **U.S. Cl.** **156/578**; 156/579; 156/577; 417/44.2; 417/38; 222/61; 222/185.1; 222/330; 222/334; 222/401; 239/154; 401/27

(58) **Field of Search** 156/574, 575, 156/576, 577, 578, 579; 427/179; 118/43; 417/44.1, 44.2, 44.4, 44.3, 38; 222/61, 63, 185.1, 386.5, 399, 330, 401, 608, 334; 239/154, 329, 331; 401/5, 48, 27

(56) **References Cited**

U.S. PATENT DOCUMENTS

4,090,914 A		5/1978	Hauk et al.	156/523
4,440,410 A		4/1984	Bradshaw	280/47.26
4,516,868 A	*	5/1985	Molnar	401/5
4,822,644 A		4/1989	Krueger	427/280
4,878,621 A		11/1989	Krueger	239/458
4,907,955 A		3/1990	Snipes	425/87
4,948,054 A		8/1990	Mills	239/325
4,996,941 A		3/1991	Mills	118/419
5,013,389 A		5/1991	Retti	156/526
5,037,011 A		8/1991	Woods	222/394
5,137,386 A		8/1992	Mower	401/48
5,137,752 A		8/1992	Mills	427/179
5,188,263 A		2/1993	Woods	222/394
5,230,608 A	*	7/1993	Januska	417/44
5,279,684 A		1/1994	Retti	156/71

(List continued on next page.)

OTHER PUBLICATIONS

Premier Drywall Tool Co., Parts Diagram for Flat Box Handle, Aug. 1, 1995.*
Advertisement for "The Cannon" and the "Apla–Pump" from www.all–wall.com(1 page) (no date).
Brochure "The Future of Drywall Finishing" from Renegade Tool (4 pages) (no date).
Renegade Tool, L.L.C. Price List (1 page) (no date).
Renegade Tool thank you letter regarding Mud Buggy (1 page) (no date).
Speed Gem II Pictures Page (2 pages) (No Date).
Premier Drywall Tool Co. brochure "The New Generation of Drywall Taping Tools" (4 pages) (No Date).
Renegade Tool brochure "The Future of Interior Finishing" (8 pages) (No Date).
Parts Diagrams for Automatic Taper, Automatic Taper Extention, Corner Box, etc. (12 pages) (Aug. 1, 1995).

Primary Examiner—Jerry A Lorengo
(74) *Attorney, Agent, or Firm*—Parsons Behle & Latimer; Daniel P. McCarthy

(57) **ABSTRACT**

A grout slurry pumping system, and a grout slurry control box and associated tools are described. Methods of using the pumping system and control box are also described. The pumping system and control box may be used separately or together. The pumping system maintains a grout slurry of desired consistency and can provide it through a hose to remote locations. The control box operates to apply grout to a work surface in desired quantities and in desired amounts according to a control valve.
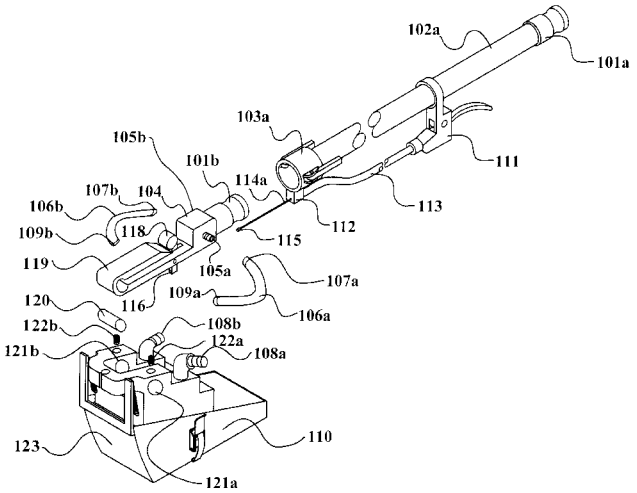
10 Claims, 29 Drawing Sheets