FIG. 1

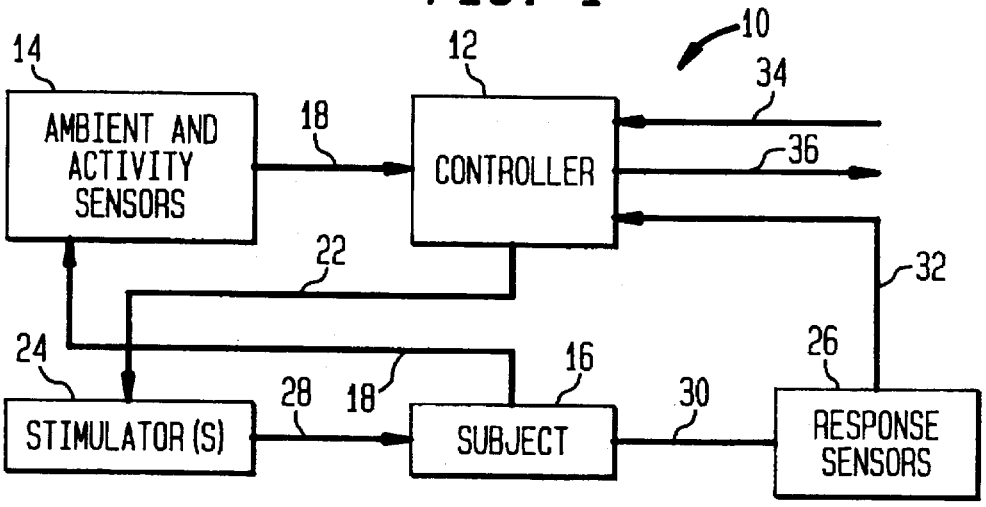
10
14
12
34
AMBIENT AND ACTIVITY SENSORS
18
CONTROLLER
36
22
32
24
16
26
28
18
30
STIMULATOR (S)
SUBJECT
RESPONSE SENSORS

FIG. 3

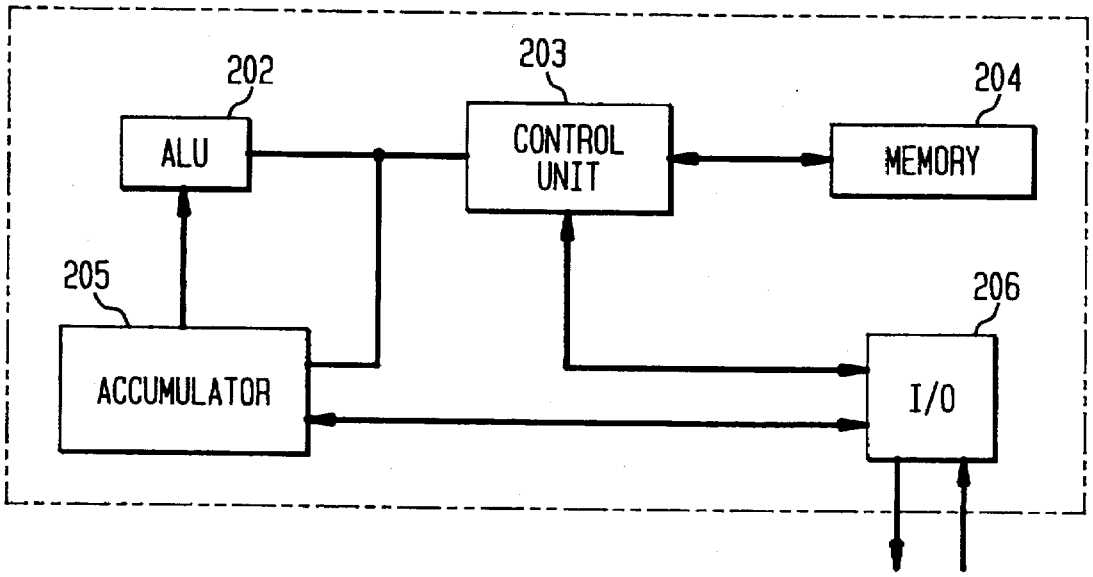
202
203
204
ALU
CONTROL UNIT
MEMORY
205
206
ACCUMULATOR
I/O