STATIONARY PLANKTON SAMPLER

Filed Oct. 19, 1967 3 Sheets-Sheet 2

FIG. 3.

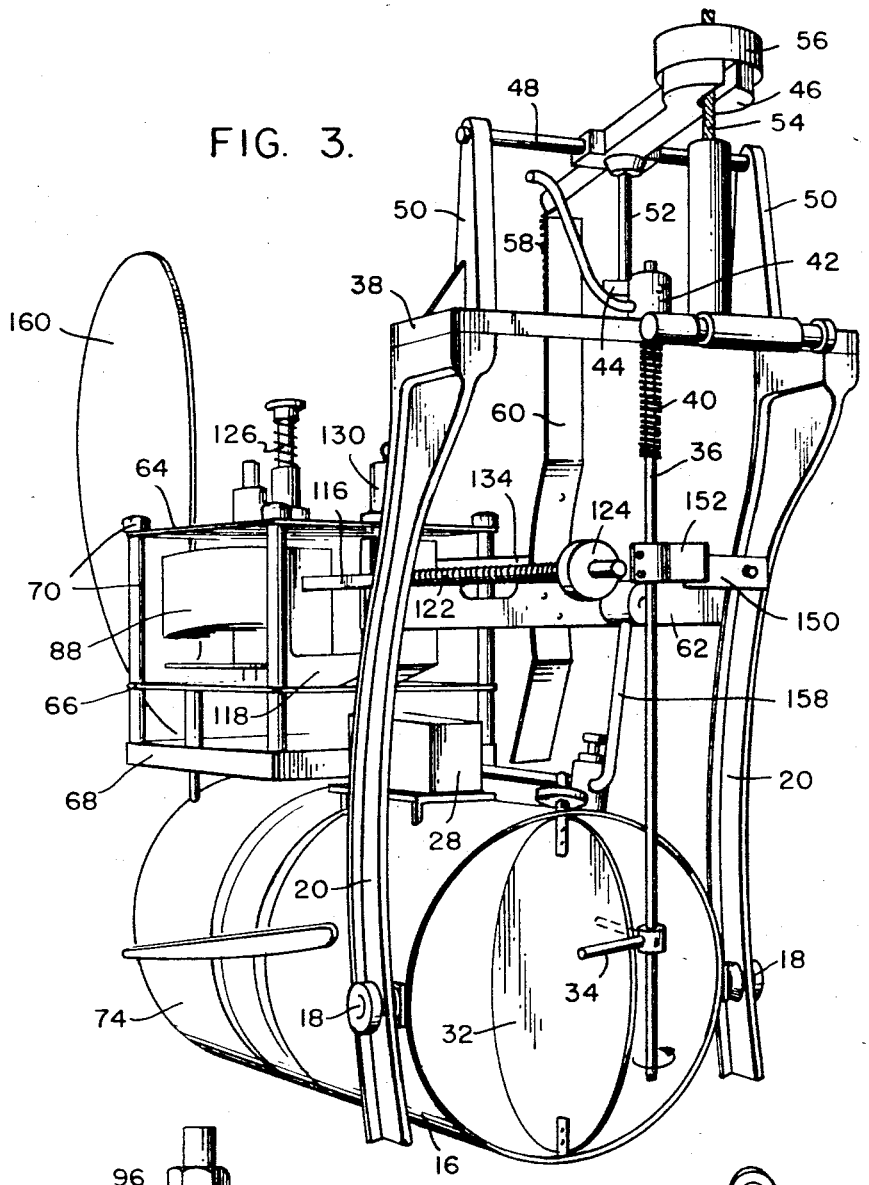

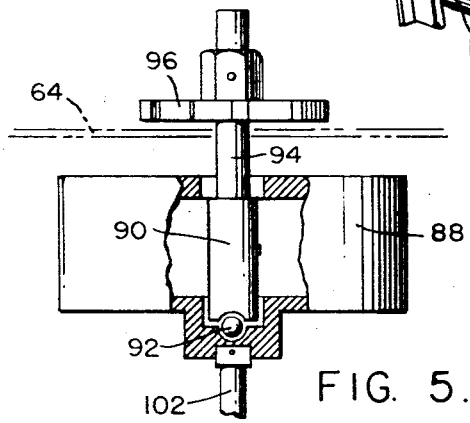

FIG. 5.

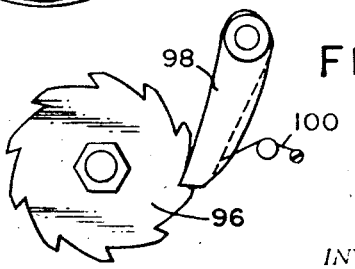

FIG. 4.

INVENTOR.
CHARLES J. STUART, JR.
BY Irvin F. Johnston
ATTORNEY.