United States Patent [19]

Faulkner

[11] **4,366,582**

[45] **Jan. 4, 1983**

[54] **POSTERIOR CHAMBER INTRAOCULAR LENS**

[76] Inventor: **Gerald D. Faulkner,** 1380 Lusitana St., Ste. 714, Honolulu, Hi. 96813

[21] Appl. No.: **211,589**

[22] Filed: **Dec. 1, 1980**

[51] **Int. Cl.**[3] **A61F 1/16;** A61F 1/24

[52] **U.S. Cl.** **3/13**

[58] **Field of Search** 3/13, 1

[56] **References Cited**

U.S. PATENT DOCUMENTS

3,994,027	11/1976	Jensen et al.	3/13
4,041,552	8/1977	Ganias	3/13
4,073,015	2/1978	Peyman et al.	3/13
4,092,743	6/1978	Kelman	3/13
4,110,848	9/1978	Jensen	3/13
4,159,546	7/1979	Shearing	3/13
4,242,760	1/1981	Rainin	3/13
4,244,060	1/1981	Hoffer	3/13
4,285,072	8/1981	Morcher et al.	3/13

Primary Examiner—Ronald L. Frinks

Attorney, Agent, or Firm—Daley & Brandt

[57] **ABSTRACT**

A lens for implantation in the posterior chamber of the eye is provided with a structure which engages the anterior surface of the iris to retain the lens against posterior displacement within the eye. The lens may be utilized even if the capsule is missing or damaged.
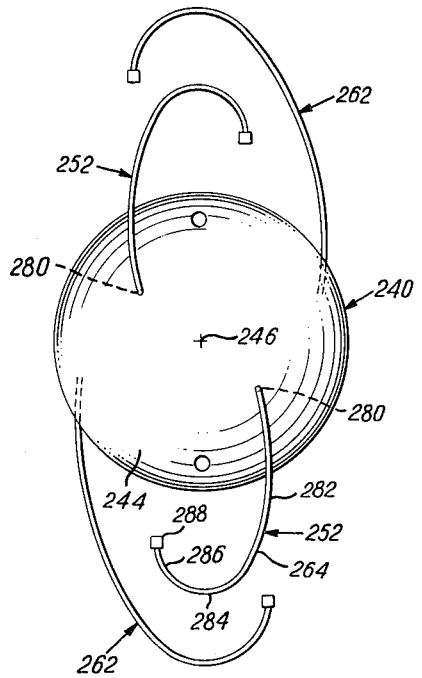
8 Claims, 8 Drawing Figures