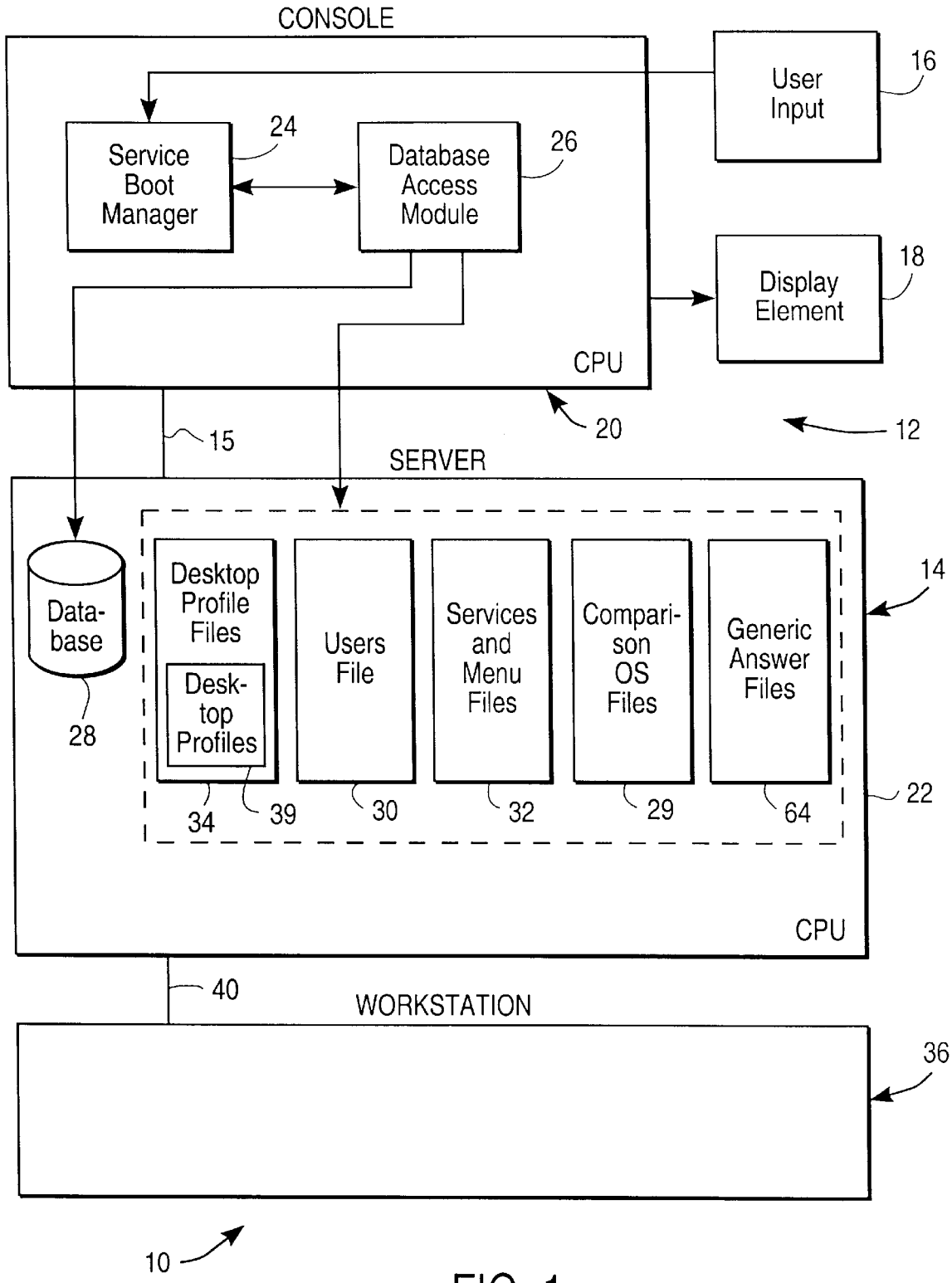
CONSOLE
User Input
16
Service Boot Manager
24
Database Access Module
26
Display Element
18
CPU
20
12
15
SERVER
Data-base
28
Desktop Profile Files
Desk-top Profiles
Users File
Services and Menu Files
Compari-son OS Files
Generic Answer Files
14
22
34
39
30
32
29
64
CPU
40
WORKSTATION
36
10

FIG. 1