PANEL SUPPORT SYSTEM FOR BUILDING STRUCTURES

Filed March 11, 1969 3 Sheets-Sheet 1

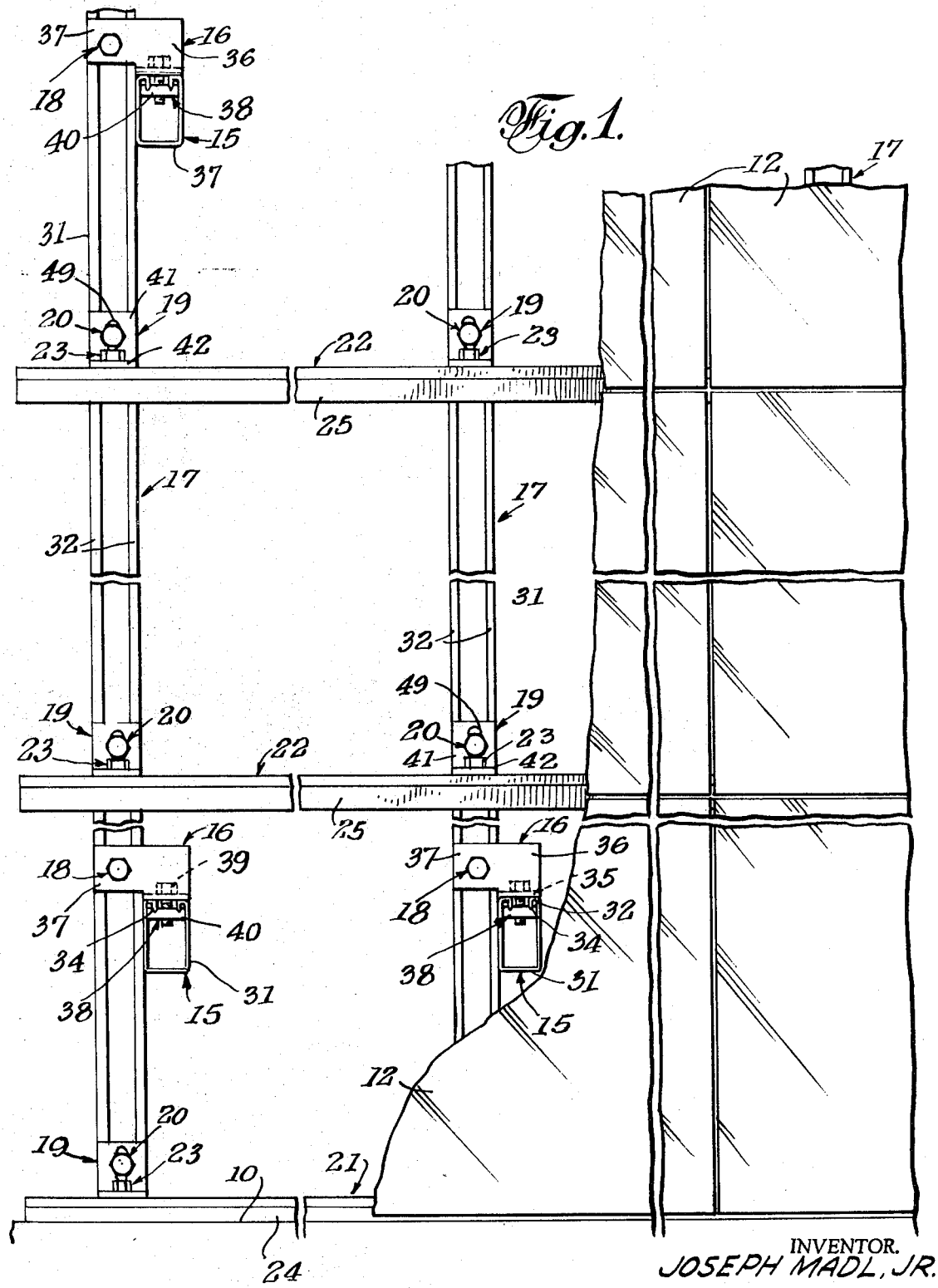

INVENTOR.
JOSEPH MADL, JR.

BY
Hyman Jackman
ATTORNEY