US008353082B2

(12) **United States Patent**
Naukkarinen

(10) **Patent No.: US 8,353,082 B2**
(45) **Date of Patent: Jan. 15, 2013**

(54) **METHOD AND APPARATUS FOR A HINGE**

(75) Inventor: **Samu Naukkarinen**, Espoo (FI)

(73) Assignee: **Nokia Corporation**, Espoo (FI)

(*) Notice: Subject to any disclaimer, the term of this patent is extended or adjusted under 35 U.S.C. 154(b) by 902 days.

(21) Appl. No.: **12/317,820**

(22) Filed: **Dec. 29, 2008**

(65) **Prior Publication Data**

US 2010/0162527 A1 Jul. 1, 2010

(51) **Int. Cl.**
E05D 7/00 (2006.01)

(52) **U.S. Cl.** **16/354**; 16/366

(58) **Field of Classification Search** 16/244, 16/246, 354, 355–357, 366, 386, 387; 49/149, 49/152, 155, 158, 208, 333, 334, 335, 381; 160/229.1
See application file for complete search history.

(56) **References Cited**

U.S. PATENT DOCUMENTS

1,673,304	A *	6/1928	Thompson	16/354
2,206,739	A *	7/1940	Brogren et al.	16/354
4,323,059	A *	4/1982	Rambert et al.	602/16
4,960,256	A *	10/1990	Chihara et al.	248/286.1
4,979,265	A *	12/1990	Grass	16/291
5,060,640	A *	10/1991	Rasmusson	602/16
5,168,426	A *	12/1992	Hoving et al.	361/679.09
5,363,089	A *	11/1994	Goldenberg	340/7.63
5,966,777	A *	10/1999	Jantschek	16/354
5,987,704	A *	11/1999	Tang	16/354
6,519,812	B2 *	2/2003	Ko et al.	16/354
6,900,981	B2 *	5/2005	Kuivas et al.	361/679.06
7,140,074	B2 *	11/2006	Han et al.	16/366
7,187,538	B2 *	3/2007	Homer et al.	361/679.21
7,299,525	B2 *	11/2007	Chang	16/327
7,345,872	B2 *	3/2008	Wang	361/679.55
7,414,834	B2 *	8/2008	Ukonaho et al.	361/679.55
7,418,766	B2 *	9/2008	Nelson et al.	16/239
7,426,406	B2 *	9/2008	Maatta et al.	455/575.8
7,488,300	B2 *	2/2009	Houser	602/16
7,512,426	B2 *	3/2009	Maatta et al.	455/575.1
7,832,057	B2 *	11/2010	Hoffman	16/367
2005/0122671	A1 *	6/2005	Homer	361/681
2005/0155182	A1 *	7/2005	Han et al.	16/336
2006/0133052	A1	6/2006	Harmon et al.	361/752
2007/0101541	A1	5/2007	Ying et al.	16/221
2008/0176610	A1	7/2008	Pan et al.	455/575.3

FOREIGN PATENT DOCUMENTS

WO	WO-02063789	A1	8/2002
WO	WO-2007069552	A1	6/2007

* cited by examiner

Primary Examiner — Roberta Delisle
(74) *Attorney, Agent, or Firm* — Harrington & Smith

(57) **ABSTRACT**

In accordance with an example embodiment of the present invention, there is provided an apparatus including a first body, a second body, and a joint member, the joint member having supported therein a first shaft and a second shaft , the first shaft connected to the first body and the second shaft connected to the second body, wherein the joint member is configured to cause or to allow a change in a separation distance between the first shaft and the second shaft upon a rotational movement of the first body relative to the second body.
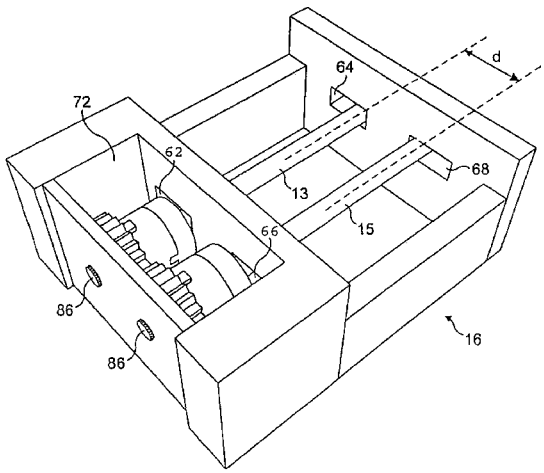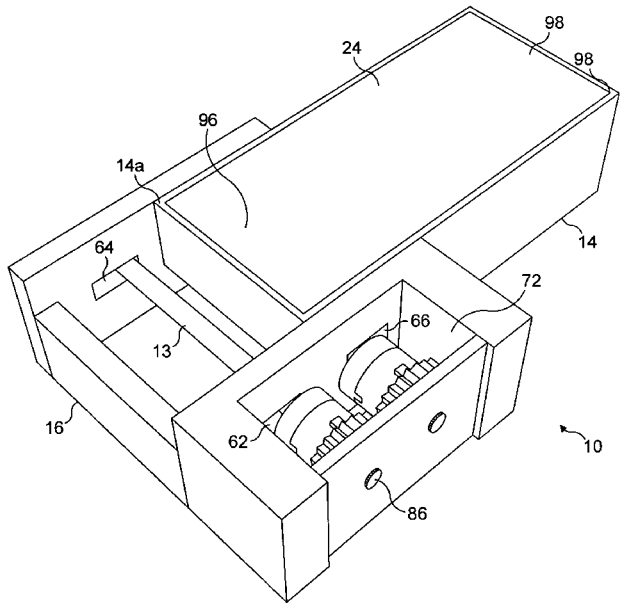
20 Claims, 11 Drawing Sheets