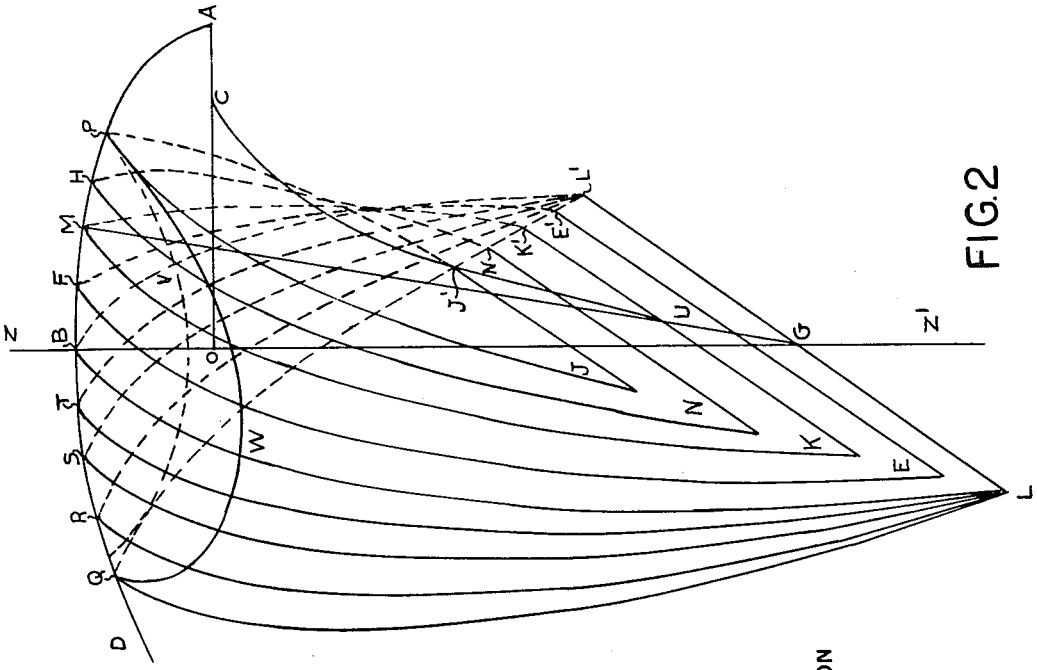
A
C
P
H
M
F
B
Z
O
T
S
R
Q
D
W
J'
N'
K'
E'
L'
U
G
Z'
J
N
K
E
L

FIG.2

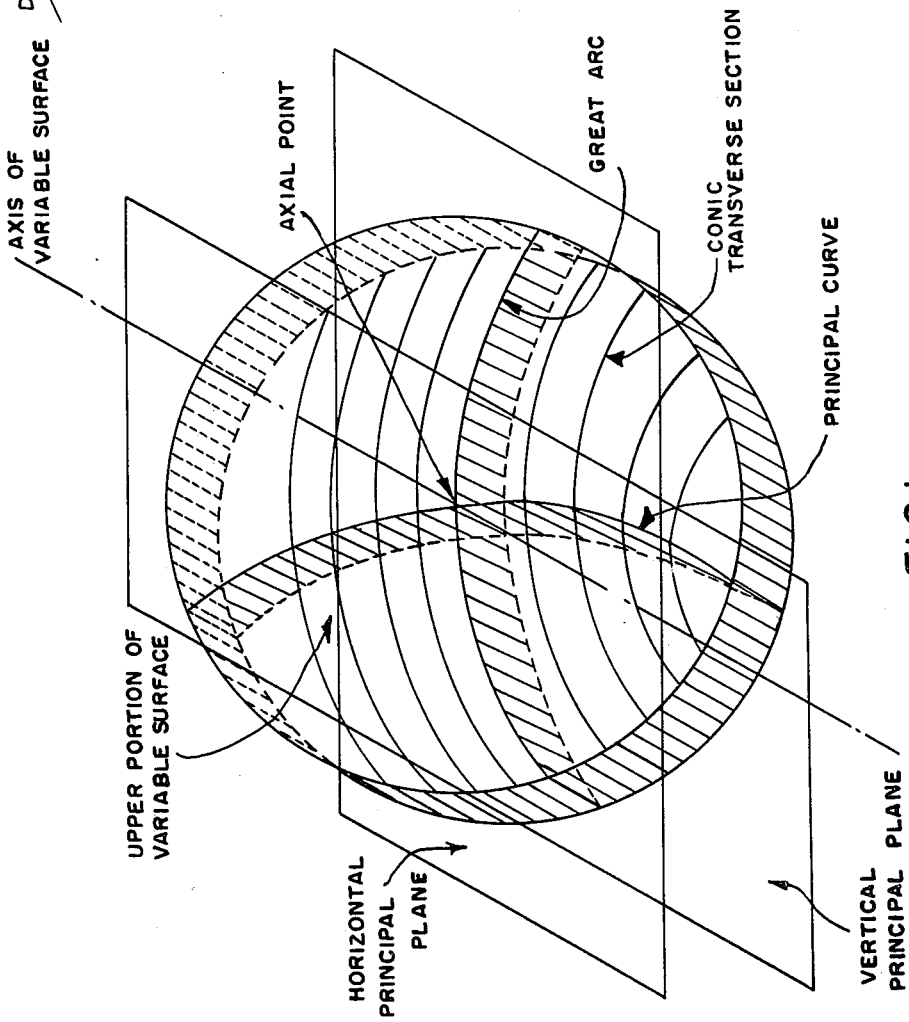
AXIS OF VARIABLE SURFACE
AXIAL POINT
GREAT ARC
CONIC TRANSVERSE SECTION
PRINCIPAL CURVE
UPPER PORTION OF VARIABLE SURFACE
HORIZONTAL PRINCIPAL PLANE
VERTICAL PRINCIPAL PLANE

FIG.1