US009543482B2

(12) **United States Patent**
Lin et al.

(10) **Patent No.: US 9,543,482 B2**
(45) **Date of Patent: Jan. 10, 2017**

(54) **LED PACKAGE**

(71) Applicant: **ADVANCED OPTOELECTRONIC TECHNOLOGY, INC.**, Hsinchu Hsien (TW)

(72) Inventors: **Hou-Te Lin**, Hsinchu (TW); **Chao-Hsiung Chang**, Hsinchu (TW); **Pin-Chuan Chen**, Hsinchu (TW); **Lung-Hsin Chen**, Hsinchu (TW)

(73) Assignee: **ADVANCED OPTOELECTRONIC TECHNOLOGY, INC.**, Hsinchu Hsien (TW)

(*) Notice: Subject to any disclaimer, the term of this patent is extended or adjusted under 35 U.S.C. 154(b) by 0 days.

(21) Appl. No.: **14/523,425**

(22) Filed: **Oct. 24, 2014**

(65) **Prior Publication Data**

US 2015/0179902 A1 Jun. 25, 2015

(30) **Foreign Application Priority Data**

Dec. 24, 2013 (CN) 2013 1 0718045

(51) **Int. Cl.**

H01L 33/20	(2010.01)
H01L 33/38	(2010.01)
H01L 33/50	(2010.01)
H01L 33/54	(2010.01)

(52) **U.S. Cl.**

CPC ***H01L 33/507*** (2013.01); ***H01L 33/505*** (2013.01)

(58) **Field of Classification Search**

CPC H01L 33/505
USPC 257/98
See application file for complete search history.

(56) **References Cited**

U.S. PATENT DOCUMENTS

2007/0228947	A1*	10/2007	Tanimoto et al.	313/506
2008/0093614	A1*	4/2008	Nagai	F21K 9/00 257/98
2008/0315228	A1*	12/2008	Krames	H01L 33/46 257/98
2010/0051984	A1*	3/2010	West	H01L 33/44 257/98
2010/0200870	A1*	8/2010	Shen	H01L 33/44 257/88
2012/0319148	A1*	12/2012	Donofrio	H01L 33/54 257/98
2013/0240915	A1*	9/2013	Nakagawa et al.	257/88
2014/0167598	A1*	6/2014	Chen et al.	313/498
2015/0069439	A1*	3/2015	Deeben et al.	257/98
2015/0118773	A1*	4/2015	Kojima	C09K 11/02 438/29

FOREIGN PATENT DOCUMENTS

TW 201104914 A 2/2011

* cited by examiner

Primary Examiner — Moazzam Hossain
(74) *Attorney, Agent, or Firm* — Zhigang Ma

(57) **ABSTRACT**

The present invention is related to a light emitting diode (LED) package. The LED package includes a blue LED chip, a first electrode, a second electrode and a phosphor layer. The phosphor layer covers an outer periphery of the blue LED chip, except a bottom surface of the blue LED chip. The phosphor layer is mixed by yellow fluorescent powder and glue. The phosphor layer includes a main portion corresponding to a central portion of an emitting angle of the blue LED chip and an extending portion corresponding to a periphery of the emitting angle. An average thickness of the main portion is larger than the thickness of the extending portion.
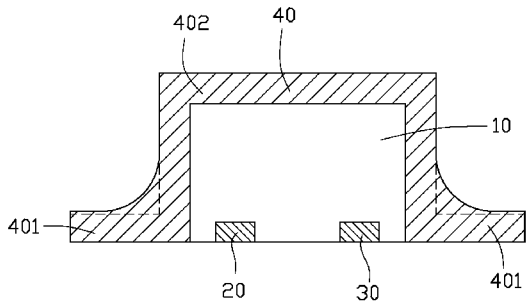
9 Claims, 4 Drawing Sheets