US00D428882S

# United States Patent [19]

Musa

[11] Patent Number: Des. 428,882

[45] Date of Patent: ** Aug. 1, 2000

[54] **DIGITAL INFORMATION STORAGE MODULE SIMULATING A BOOK**

[76] Inventor: **Shah M. Musa**, 2200 Monroe St., No. 709, Santa Clara, Calif. 95050

[**] Term: **14 Years**

[21] Appl. No.: **29/109,240**

[22] Filed: **Aug. 11, 1999**

[51] **LOC (7) Cl.** ..... **14-02**

[52] **U.S. Cl.** ..... **D14/345**

[58] **Field of Search** ..... D14/345, 341, D14/346; D19/26, 59, 60; 345/104, 156, 173, 168; 364/708.1; 434/307–309; 349/12; 178/18.03; D18/1, 7

[56] **References Cited**

U.S. PATENT DOCUMENTS

D. 284,966 8/1986 Larkins ..... D14/345
D. 302,549 8/1989 Wright ..... D14/345
D. 318,859 8/1991 Hollis ..... D14/345
D. 326,446 5/1992 Wong ..... D14/345
D. 410,028 5/1999 Fyffe ..... D14/345

*Primary Examiner*—Freda Nunn
*Attorney, Agent, or Firm*—C. Michael Zimmerman

[57] **CLAIM**

The ornamental design for a digital information storage module simulating a book, as shown and described.

**DESCRIPTION**

FIG. **1** is an isometric view of my new design for a digital information storage module simulating a book;

FIG. **2** is a top elevation view of my design shown in FIG. **1**, it being understood that the bottom is the same;

FIG. **3** is an end elevation view of my design shown in FIG. **1**, it being understood that both ends are the same;

FIG. **4** is an elevation view of one side of my design shown in FIG. **1**; and,

FIG. **5** is an elevation view of the other side of my design shown in FIG. **1**.
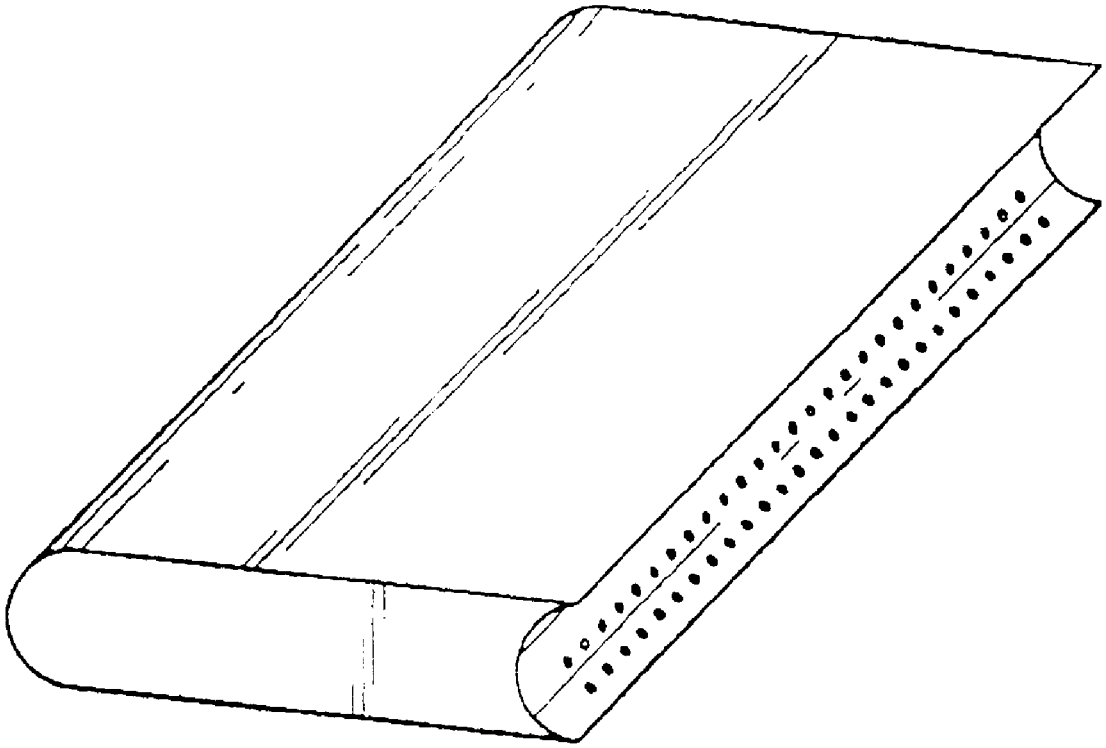
**1 Claim, 1 Drawing Sheet**