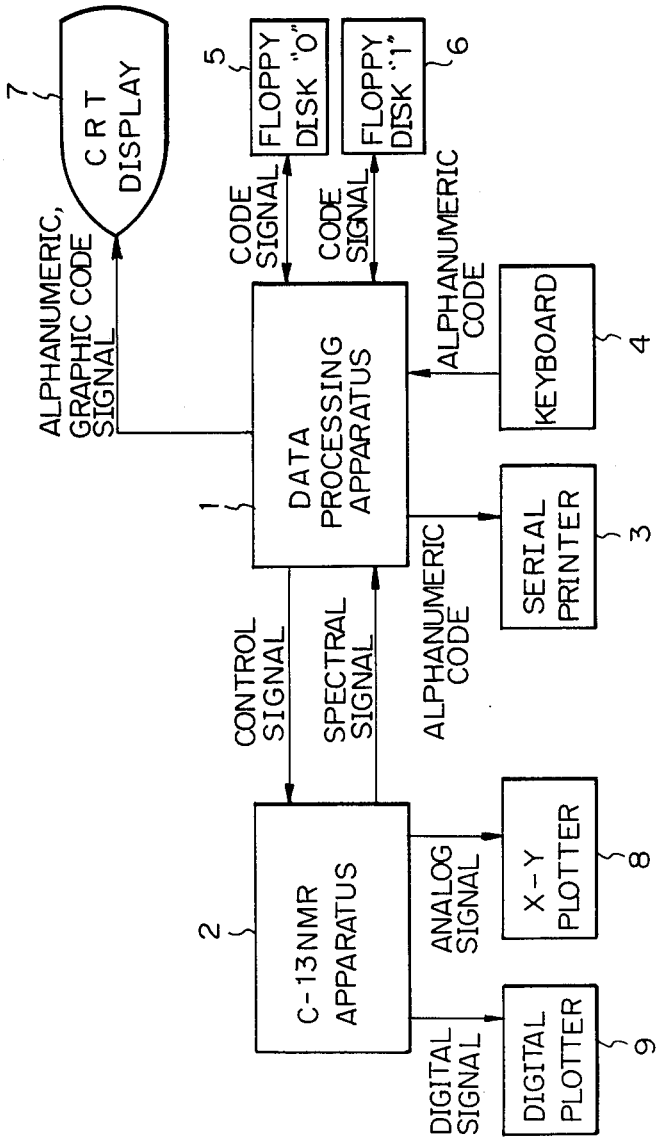
7
CRT DISPLAY
5
FLOPPY DISK "0"
FLOPPY DISK "1"
6
ALPHANUMERIC, GRAPHIC CODE SIGNAL
CODE SIGNAL
CODE SIGNAL
ALPHANUMERIC CODE
1
DATA PROCESSING APPARATUS
KEYBOARD
4
SERIAL PRINTER
3
CONTROL SIGNAL
SPECTRAL SIGNAL
ALPHANUMERIC CODE
2
C-13NMR APPARATUS
ANALOG SIGNAL
X-Y PLOTTER
8
DIGITAL SIGNAL
DIGITAL PLOTTER
9

Fig. 1