US009411382B2

(12) **United States Patent**
Atkinson

(10) **Patent No.: US 9,411,382 B2**
(45) **Date of Patent: Aug. 9, 2016**

(54) **ROTATABLE DISPLAY ASSEMBLY**

(75) Inventor: **Lee Atkinson**, Taipei (TW)

(73) Assignee: **Hewlett-Packard Development Company, L.P.**, Houston, TX (US)

(*) Notice: Subject to any disclaimer, the term of this patent is extended or adjusted under 35 U.S.C. 154(b) by 1244 days.

(21) Appl. No.: **13/003,333**

(22) PCT Filed: **Jul. 10, 2008**

(86) PCT No.: **PCT/US2008/069715**

§ 371 (c)(1),
(2), (4) Date: **Jan. 10, 2011**

(87) PCT Pub. No.: **WO2010/005440**

PCT Pub. Date: **Jan. 14, 2010**

(65) **Prior Publication Data**

US 2011/0110670 A1 May 12, 2011

(51) **Int. Cl.**
G06F 1/16 (2006.01)
H04B 10/80 (2013.01)

(52) **U.S. Cl.**
CPC ***G06F 1/1683*** (2013.01); ***G06F 1/162*** (2013.01); ***G06F 1/1681*** (2013.01); ***H04B 10/803*** (2013.01); ***H04B 10/806*** (2013.01)

(58) **Field of Classification Search**
CPC G06F 1/1683; G06F 1/1681; G06F 1/162; H04B 10/803; H04B 10/806
See application file for complete search history.

(56) **References Cited**

U.S. PATENT DOCUMENTS

5,949,565	A	9/1999	Ishida	
7,636,523	B2 *	12/2009	Schorpp	398/153
2006/0203014	A1	9/2006	Lev et al.	
2007/0065158	A1 *	3/2007	Shindou et al.	398/164
2007/0297727	A1	12/2007	Ueno et al.	
2008/0308755	A1 *	12/2008	Hashizume et al.	250/553

FOREIGN PATENT DOCUMENTS

KR 10-1999-0054612 7/1999

OTHER PUBLICATIONS

The International Search Report and the Written Opinion of the International Searching Authority for International Application No. PCT/US2008/069715 dated Mar. 11, 2009.

* cited by examiner

Primary Examiner — Leslie Pascal
(74) *Attorney, Agent, or Firm* — HP Inc Patent Department

(57) **ABSTRACT**

A rotatable display assembly is provided. The rotatable display assembly includes a base unit, a display unit and a wireless transmission system. The display unit is rotatably coupled to the base unit using at least one pivotal means, and the wireless transmission system is adapted to transmit data wirelessly between the base unit and the display unit.
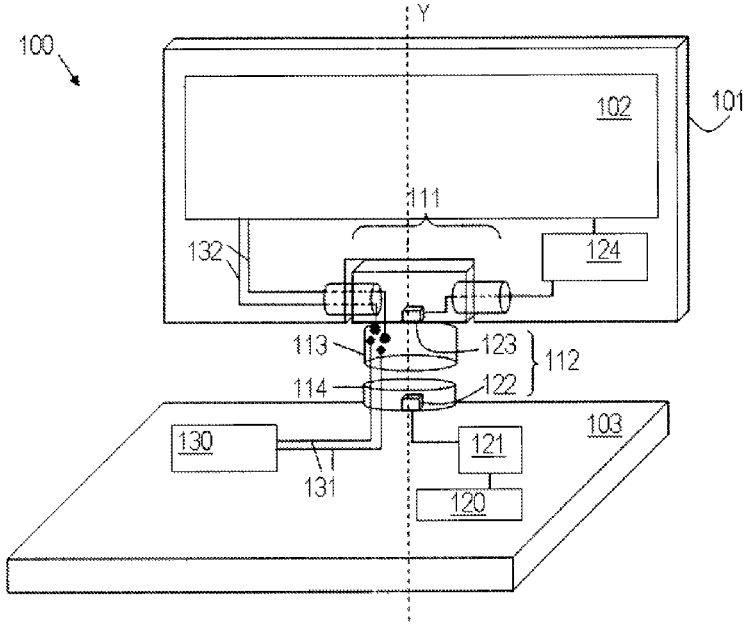
17 Claims, 9 Drawing Sheets