US009411082B2

(12) **United States Patent**
Beon et al.

(10) **Patent No.: US 9,411,082 B2**
(45) **Date of Patent: Aug. 9, 2016**

(54) **POLARIZING PLATE, DISPLAY DEVICE INCLUDING THE POLARIZING PLATE, AND METHOD OF MANUFACTURING THE POLARIZING PLATE**

(71) Applicant: **Samsung Display Co., Ltd.**, Yongin (KR)

(72) Inventors: **Beong-hun Beon**, Hwaseong-si (KR); **Seungbeom Park**, Hwaseong-si (KR); **Jihye Kim**, Hwaseong-si (KR)

(73) Assignee: **Samsung Display Co., Ltd.**, Yongin-si (KR)

(*) Notice: Subject to any disclaimer, the term of this patent is extended or adjusted under 35 U.S.C. 154(b) by 0 days.

(21) Appl. No.: **14/306,787**

(22) Filed: **Jun. 17, 2014**

(65) **Prior Publication Data**

US 2015/0168623 A1 Jun. 18, 2015

(30) **Foreign Application Priority Data**

Dec. 18, 2013 (KR) 10-2013-0158432

(51) **Int. Cl.**

H01L 29/08	(2006.01)
H01L 35/24	(2006.01)
H01L 51/00	(2006.01)
G02B 5/30	(2006.01)
G02B 1/10	(2015.01)
G02B 1/04	(2006.01)
G02B 5/02	(2006.01)
H01L 27/32	(2006.01)
H01L 51/52	(2006.01)

(52) **U.S. Cl.**

CPC ***G02B 5/3016*** (2013.01); ***G02B 1/04*** (2013.01); ***G02B 1/105*** (2013.01); ***G02B 5/0226*** (2013.01); ***G02B 5/3041*** (2013.01); ***G02B 5/3083*** (2013.01); ***H01L 27/3244*** (2013.01); ***H01L 51/5293*** (2013.01)

(58) **Field of Classification Search**

None

See application file for complete search history.

(56) **References Cited**

U.S. PATENT DOCUMENTS

6,848,897	B2	2/2005	Lazarev et al.	
6,913,783	B2	7/2005	Lazarev et al.	
6,942,925	B1	9/2005	Lazarev et al.	
7,144,608	B2 *	12/2006	Paukshto	C09K 19/3452 252/299.62
7,315,338	B2	1/2008	Yeh et al.	
7,638,796	B2	12/2009	Kwak et al.	
8,338,823	B2	12/2012	Kim et al.	
2006/0113904	A1	6/2006	Bae et al.	
2006/0274220	A1 *	12/2006	Kim	G02F 1/13394 349/56
2008/0186432	A1 *	8/2008	Kye	G02B 5/3016 349/96
2010/0165598	A1 *	7/2010	Chen	G02B 6/0056 362/19
2010/0309415	A1	12/2010	Rho et al.	
2012/0050652	A1	3/2012	Chang et al.	
2013/0169896	A1 *	7/2013	Iwahashi	B41M 3/06 349/15
2013/0307759	A1 *	11/2013	Jang	G09G 3/30 345/76

FOREIGN PATENT DOCUMENTS

KR 10-2013-0062572 6/2013

* cited by examiner

Primary Examiner — Sonya D McCall Shepard

(74) *Attorney, Agent, or Firm* — H.C. Park & Associates, PLC

(57) **ABSTRACT**

A polarizing plate includes a base film and a polarizer. The polarizer includes a dichroic dye formed on the base film, oriented perpendicular to a plane of the base film, and having a discotic liquid crystal phase.
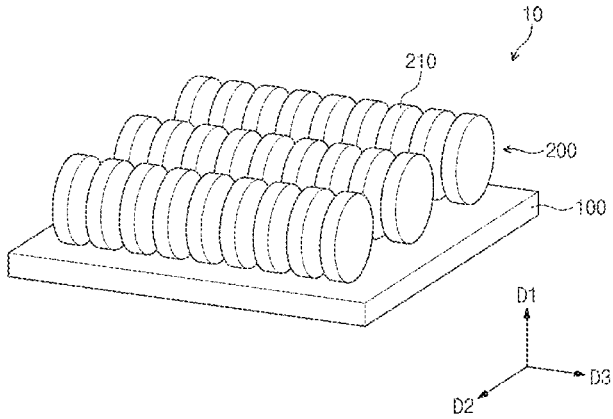
17 Claims, 5 Drawing Sheets