US009410882B2

(12) **United States Patent**
**Haase et al.**

(10) **Patent No.: US 9,410,882 B2**
(45) **Date of Patent: Aug. 9, 2016**

(54) **TURBIDIMETER**

(71) Applicant: **HACH LANGE GMBH**, Berlin (DE)

(72) Inventors: **Barbara Haase**, Berlin (DE); **Manfred Battefeld**, Duesseldorf (DE); **Andreas Mitreiter**, Kleinmachnow (DE); **Michael Kussmann**, Duesseldorf (DE); **Bas De Heij**, Dormagen (DE); **Clemens Hanschke**, Berlin (DE); **Wayne Perdue**, Berlin (DE)

(73) Assignee: **HACH LANGE GMBH**, Berlin (DE)

( * ) Notice: Subject to any disclaimer, the term of this patent is extended or adjusted under 35 U.S.C. 154(b) by 0 days.

(21) Appl. No.: **14/890,428**

(22) PCT Filed: **May 13, 2013**

(86) PCT No.: **PCT/EP2013/059846**
§ 371 (c)(1),
(2) Date: **Nov. 11, 2015**

(87) PCT Pub. No.: **WO2014/183778**
PCT Pub. Date: **Nov. 20, 2014**

(65) **Prior Publication Data**

US 2016/0109365 A1 Apr. 21, 2016

(51) **Int. Cl.**
***G01N 21/00*** (2006.01)
***G01N 21/51*** (2006.01)

(52) **U.S. Cl.**
CPC ..... ***G01N 21/51*** (2013.01); *G01N 2021/513* (2013.01); *G01N 2201/0636* (2013.01)

(58) **Field of Classification Search**
CPC ..... G01N 21/00; G01N 21/51
USPC ..... 356/338
See application file for complete search history.

(56) **References Cited**

U.S. PATENT DOCUMENTS

| | | | | |
|---|---|---|---|---|
| 4,129,383 | A * | 12/1978 | Malinowski | G08B 17/107 250/574 |
| 4,690,560 | A * | 9/1987 | Coogan | G01N 21/51 356/236 |
| 6,705,736 | B1 * | 3/2004 | Pressler | G02B 5/001 359/853 |
| 7,362,517 | B2 * | 4/2008 | Togino | G02B 13/06 348/36 |
| 8,687,286 | B2 * | 4/2014 | Palumbo | G02B 5/001 359/709 |
| 2006/0103842 | A1 * | 5/2006 | Tokhtuev | G01N 21/53 356/338 |
| 2012/0170137 | A1 | 7/2012 | Palumbo | |

(Continued)

FOREIGN PATENT DOCUMENTS

| | | | |
|---|---|---|---|
| DE | 934 978 | C | 11/1955 |
| EP | 1 826 556 | A2 | 8/2007 |
| GB | 1 298 658 | A | 12/1972 |

*Primary Examiner* — Roy M Punnoose
(74) *Attorney, Agent, or Firm* — Norman B. Thot

(57) **ABSTRACT**

A turbidimeter for measuring a turbidity of a liquid sample in a sample cuvette includes a cuvette receiving device configured to position the sample cuvette in a defined cuvette position, a light source configured to generate a parallel light beam in the sample cuvette, an annular 45° collecting mirror configured to surround the sample cuvette, a scattering body arranged concentric to the annular 45° collecting mirror, a scattering light detector arranged to receive light scattered by the scattering body, and an annular 45° concentration mirror arranged coaxially to the annular 45° collecting mirror and optically opposite to the annular 45° collecting mirror. The annular 45° collecting mirror is arranged concentric to the light beam. The annular 45° concentration mirror is configured to surround the scattering body.
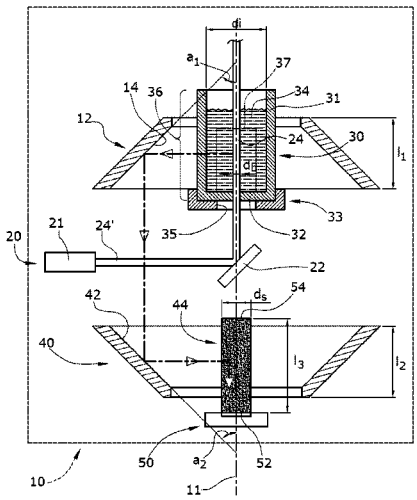
**10 Claims, 2 Drawing Sheets**