US009409682B2

(12) **United States Patent**
Newsom et al.

(10) **Patent No.: US 9,409,682 B2**
(45) **Date of Patent: Aug. 9, 2016**

(54) **NON-REMOVABLE CONTAINER NECK RING**

(71) Applicant: **Owens-Brockway Glass Container Inc.**, Perrysburg, OH (US)

(72) Inventors: **Daniel L. Newsom**, Noblesville, IN (US); **Roger P Smith**, Perrsyburg, OH (US); **Jessica R Bryant**, Toledo, OH (US); **Oleg Feygenson**, Saint-Petersburg (RU); **Igor Kachko**, Saint-Petersburg (RU); **Vladimir Vasikyev**, Saint-Petersburg (RU)

(73) Assignee: **Owens-Brockway Glass Container Inc.**, Perrysburg, OH (US)

(*) Notice: Subject to any disclaimer, the term of this patent is extended or adjusted under 35 U.S.C. 154(b) by 456 days.

(21) Appl. No.: **13/832,659**

(22) Filed: **Mar. 15, 2013**

(65) **Prior Publication Data**

US 2014/0263156 A1 Sep. 18, 2014

(51) **Int. Cl.**
B65D 45/34 (2006.01)
B65D 41/34 (2006.01)

(52) **U.S. Cl.**
CPC ***B65D 41/3495*** (2013.01); *B65D 2101/003* (2013.01)

(58) **Field of Classification Search**
CPC B65D 1/023; B65D 41/3495; B65D 49/00; B65D 55/026; B65D 55/066; B65D 2101/0084; B65D 2203/00; B65B 43/00; B23P 11/00; C09D 11/00; G09F 3/04; A61L 2/28
USPC ..... 215/14, 17–21, 49–50, 230, 258, 366; 220/86.4, DIG. 34; 222/563, 569–570; 206/495.1, 807; 283/72, 95
See application file for complete search history.

(56) **References Cited**

U.S. PATENT DOCUMENTS

712,183	A	*	10/1902	Alfi	215/26
1,042,669	A		10/1912	Gruver	
1,308,697	A		7/1919	Cadmus	
1,415,741	A	*	5/1922	Walsh	B65D 49/04 215/14
1,994,625	A		3/1935	Tivoli	
2,025,498	A	*	12/1935	Desmond	B65D 49/04 215/21
2,091,460	A		8/1937	Valliant et al.	
2,125,788	A	*	8/1938	Johnson	B65D 55/08 215/252
2,141,174	A	*	12/1938	Davis	215/21
2,153,427	A	*	4/1939	Fleisch	B65D 55/022 215/252
2,228,542	A	*	1/1941	Volkmann	B65D 55/06 215/251
2,626,723	A	*	1/1953	Onorato	215/20
3,073,470	A	*	1/1963	Greene	215/22

(Continued)

FOREIGN PATENT DOCUMENTS

BE	378261	A	4/1931
GB	03632	A	3/1911

OTHER PUBLICATIONS

PCT Search Report and Written Opinion, Int Serial No. PCT/US2014/020712, Int Filing Date: Mar. 5, 2014, Applicant: Owens-Brockway Glass Container Inc., Mail Date: Jun. 5, 2014.

Primary Examiner — J. Gregory Pickett
Assistant Examiner — Brijesh V. Patel

(57) **ABSTRACT**

A product includes a container including a neck, and a ring non-removably secured to the neck of the container. The ring may be used to non-removably couple a fitment to the container and/or may be adapted irreversibly to change a characteristic of the ring that is visible from outside of the container to advise a user that the package has been opened.
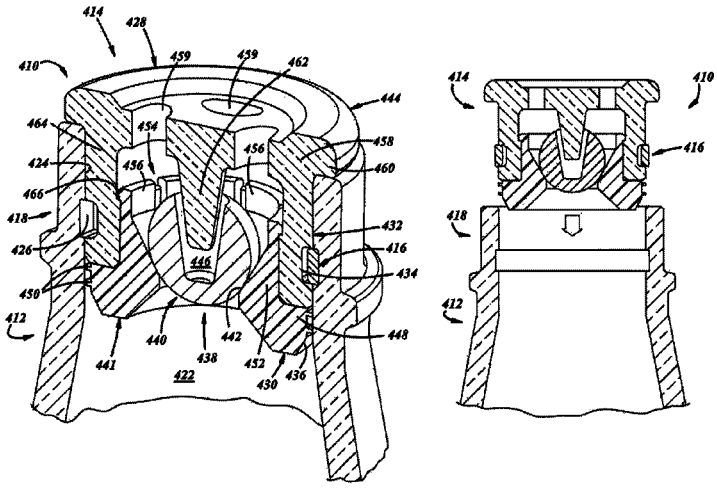
22 Claims, 7 Drawing Sheets