US009408682B2

(12) **United States Patent**
Lanz et al.

(10) **Patent No.: US 9,408,682 B2**
(45) **Date of Patent: Aug. 9, 2016**

(54) **ANIMAL IMAGING HOLDING DEVICE AND METHOD**

(75) Inventors: **Titus Lanz**, Rimpar (DE); **Michael Sauer**, Rimpar (DE)

(73) Assignee: **RAPID BIOMEDICAL GMBH**, Rimpar (DE)

(*) Notice: Subject to any disclaimer, the term of this patent is extended or adjusted under 35 U.S.C. 154(b) by 1482 days.

(21) Appl. No.: **12/430,487**

(22) Filed: **Apr. 27, 2009**

(65) **Prior Publication Data**

US 2010/0269260 A1 Oct. 28, 2010

(51) **Int. Cl.**

A61D 3/00	(2006.01)
A61B 5/055	(2006.01)
A61B 6/03	(2006.01)

(52) **U.S. Cl.**

CPC ***A61D 3/00*** (2013.01); ***A61B 5/0555*** (2013.01); *A61B 6/03* (2013.01); *A61B 2503/40* (2013.01)

(58) **Field of Classification Search**

CPC A61D 3/00

USPC 119/420, 751, 752, 753, 755, 757, 174, 119/417, 418; 5/284, 421, 422, 423, 601; 219/217

See application file for complete search history.

(56) **References Cited**

U.S. PATENT DOCUMENTS

4,721,060	A	1/1988	Cannon et al.	
4,860,741	A	8/1989	Bernstein et al.	
5,099,792	A	3/1992	Cannon et al.	
5,297,502	A	3/1994	Jaeger	
5,896,829	A	4/1999	Rothenberg et al.	
6,006,524	A *	12/1999	Park	62/3.7
6,651,587	B1	11/2003	DeFord et al.	
6,776,158	B1	8/2004	Anderson et al.	
6,904,912	B2	6/2005	Roy et al.	
7,377,276	B2	5/2008	Roy et al.	
2004/0187216	A1 *	9/2004	Lin	5/706
2004/0216737	A1	11/2004	Anderson et al.	
2007/0169717	A1	7/2007	Conger et al.	
2007/0175404	A1	8/2007	Conger et al.	
2007/0244422	A1	10/2007	Chiodo	
2008/0047554	A1	2/2008	Roy et al.	
2008/0168951	A1	7/2008	Starr et al.	
2009/0084378	A1 *	4/2009	Ichikawa	128/203.12
2010/0198047	A1 *	8/2010	Zagorchev et al.	600/411

FOREIGN PATENT DOCUMENTS

WO 2007135248 A1 11/2007

OTHER PUBLICATIONS

English-language translation of WO 2007135248 A1.*

* cited by examiner

Primary Examiner — Lisa Tsang

(74) *Attorney, Agent, or Firm* — Pearne & Gordon LLP

(57) **ABSTRACT**

A device and a method for imaging an animal including an animal holding device for keeping the animal immobile and at a desired temperature during the scanning operation for imaging the animal in real-time in a non-destructive manner.
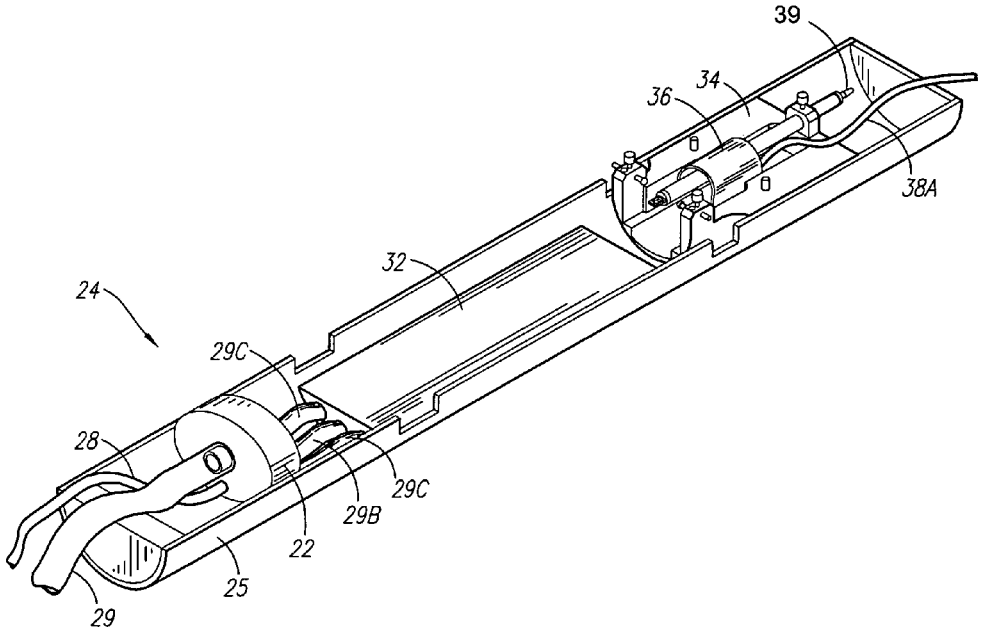
38 Claims, 8 Drawing Sheets