US009408482B2

(12) **United States Patent**
Nesbitt

(10) **Patent No.: US 9,408,482 B2**
(45) **Date of Patent: Aug. 9, 2016**

(54) **MODULAR PICTURE DISPLAY SYSTEM**

(71) Applicant: **Bonnie Northrop Nesbitt**, Arlington, VA (US)

(72) Inventor: **Bonnie Northrop Nesbitt**, Arlington, VA (US)

(*) Notice: Subject to any disclaimer, the term of this patent is extended or adjusted under 35 U.S.C. 154(b) by 0 days.

(21) Appl. No.: **14/830,595**

(22) Filed: **Aug. 19, 2015**

(65) **Prior Publication Data**

US 2016/0073796 A1 Mar. 17, 2016

Related U.S. Application Data

(60) Provisional application No. 62/048,978, filed on Sep. 11, 2014.

(51) **Int. Cl.**

A47G 1/06	(2006.01)
A47G 1/17	(2006.01)
G09F 7/04	(2006.01)

(52) **U.S. Cl.**

CPC ***A47G 1/065*** (2013.01); ***A47G 1/17*** (2013.01); ***G09F 7/04*** (2013.01); *A47G 2001/0672* (2013.01)

(58) **Field of Classification Search**

CPC A47G 1/17; A47G 1/20; A47G 1/168; A47G 1/16; A47G 2001/0672; F16B 47/003; G09F 1/10; B60R 1/06; B60R 1/0605; B60R 1/076

See application file for complete search history.

(56) **References Cited**

U.S. PATENT DOCUMENTS

4,211,382	A *	7/1980	Bonfils	A47G 1/168 248/467
4,530,482	A *	7/1985	Berinson	A47G 1/1606 248/475.1
4,605,292	A	8/1986	McIntosh	
4,875,654	A	10/1989	Chandonnet	
5,039,047	A	8/1991	Ptizo	
5,269,083	A	12/1993	Vampatella	
5,921,405	A	7/1999	Dumas	
6,241,210	B1 *	6/2001	Brindisi	A47G 1/1613 248/476
6,672,551	B2	1/2004	Rivellino	
6,688,029	B1	2/2004	Dunn	
7,934,330	B2	5/2011	Nicolaisen	
8,042,308	B2 *	10/2011	Sullivan	G09F 7/18 434/408
8,434,730	B2 *	5/2013	Ahlstrom	A47G 1/168 248/206.5
2001/0038061	A1 *	11/2001	Astell	A47G 1/1653 248/466
2002/0078612	A1	6/2002	Meacham et al.	
2003/0221349	A1 *	12/2003	Abe	G09F 7/10 40/711
2003/0233778	A1 *	12/2003	Gross	A47G 1/06 40/711
2007/0210233	A1 *	9/2007	Cave	A47G 1/168 248/467
2013/0160338	A1	6/2013	Forbis	
2014/0061409	A1 *	3/2014	Mayhew, Jr.	F16M 13/02 248/206.5
2014/0109450	A1	4/2014	Valois	

* cited by examiner

Primary Examiner — Cassandra Davis

(74) *Attorney, Agent, or Firm* — Shifrin Patent Law; Dan Shifrin

(57) **ABSTRACT**

A modular picture display system is provided. The picture display system comprises a display frame comprising a back panel, a plurality of spaced apart magnets secured to a front-side of the back panel, a front panel having a central opening and edging surrounding the opening, the front panel configured to fit over the back panel, and a plurality of spaced apart ferrous plates secured to the backside of the front panel, whereby the backside of the front panel is securable to the front-side of the back panel through magnetic cooperation between the ferrous plates and the magnets.
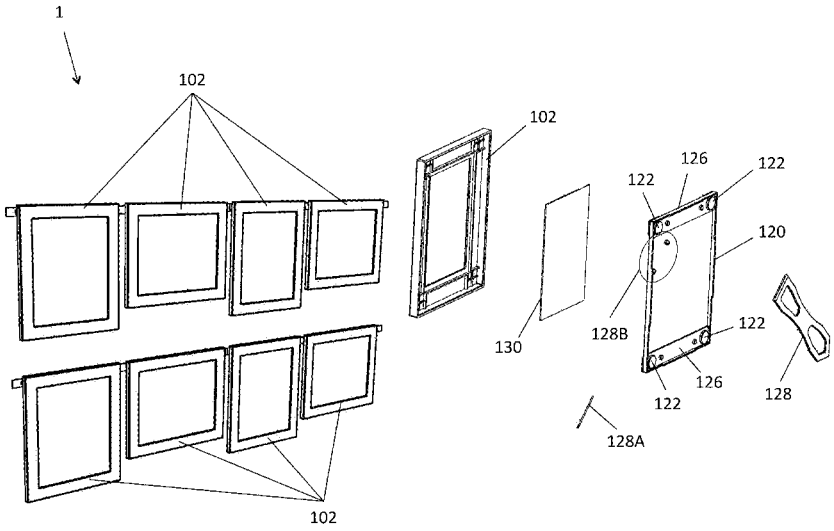
8 Claims, 8 Drawing Sheets