US007498681B1

(12) **United States Patent**
Kellogg et al.

(10) **Patent No.: US 7,498,681 B1**
(45) **Date of Patent: Mar. 3, 2009**

(54) **MECHANICAL VIBRATION TO ELECTRICAL ENERGY CONVERTER**

(75) Inventors: **Rick Allen Kellogg**, Tijeras, NM (US); **Jay Kristoffer Brotz**, Albuquerque, NM (US)

(73) Assignee: **Sandia Corporation**, Albuquerque, NM (US)

(*) Notice: Subject to any disclaimer, the term of this patent is extended or adjusted under 35 U.S.C. 154(b) by 26 days.

(21) Appl. No.: **11/688,981**

(22) Filed: **Mar. 21, 2007**

(51) **Int. Cl.**
H02K 35/00 (2006.01)

(52) **U.S. Cl.** ..... **290/1 R**

(58) **Field of Classification Search** ..... 290/1 R; 310/12, 36; 331/154
See application file for complete search history.

(56) **References Cited**

U.S. PATENT DOCUMENTS

3,064,096	A *	11/1962	Bosch	335/92
3,553,726	A *	1/1971	Zimmerman	310/15
3,581,129	A *	5/1971	Ganter et al.	310/25
4,500,827	A *	2/1985	Merritt et al.	322/3
4,623,808	A *	11/1986	Beale et al.	310/15
4,924,123	A *	5/1990	Hamajima et al.	310/15
5,347,186	A *	9/1994	Konotchick	310/17
5,349,256	A *	9/1994	Holliday	310/12
5,543,956	A *	8/1996	Nakagawa et al.	359/225
5,818,132	A *	10/1998	Konotchick	310/17
5,909,068	A *	6/1999	Wakiwaka et al.	310/15
6,276,313	B1 *	8/2001	Yang et al.	123/46 E
6,538,349	B1 *	3/2003	Lee et al.	310/15
6,611,140	B1	8/2003	Bloechl et al.	
6,750,596	B2 *	6/2004	Kim et al.	310/339
6,751,395	B1 *	6/2004	Novotny et al.	385/140
6,812,583	B2 *	11/2004	Cheung et al.	290/1 R
6,984,902	B1 *	1/2006	Huang et al.	310/26
7,064,876	B2 *	6/2006	Cannon et al.	359/204
7,078,832	B2 *	7/2006	Inagaki et al.	310/12

(Continued)

FOREIGN PATENT DOCUMENTS

EP 1841049 A1 * 10/2007

(Continued)

OTHER PUBLICATIONS

Mitcheson, P.D., Green, T.C., Yeatman, E.M., Holmes, A.S., "Architectures for Vibration-Driven Micropower Generators", J. Microelectromech. Syst., vol. 13, No. 3, Jun. 2004, pp. 429-440.

(Continued)

Primary Examiner—Joseph Waks
(74) *Attorney, Agent, or Firm*—William R. Conley

(57) **ABSTRACT**

Electromechanical devices that generate an electrical signal in response to an external source of mechanical vibrations can operate as a sensor of vibrations and as an energy harvester for converting mechanical vibration to electrical energy. The devices incorporate a magnet that is movable through a gap in a ferromagnetic circuit, wherein a coil is wound around a portion of the ferromagnetic circuit. A flexible coupling is used to attach the magnet to a frame for providing alignment of the magnet as it moves or oscillates through the gap in the ferromagnetic circuit. The motion of the magnet can be constrained to occur within a substantially linear range of magnetostatic force that develops due to the motion of the magnet. The devices can have ferromagnetic circuits with multiple arms, an array of magnets having alternating polarity and, encompass micro-electromechanical (MEM) devices.
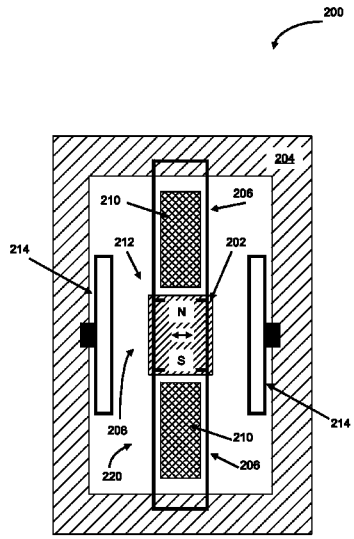
12 Claims, 11 Drawing Sheets