United States Patent

McCoy

[15] 3,697,681

[45] Oct. 10, 1972

[54] **PLACEMENT OF IMAGE ON MATRIX DISPLAY**

[72] Inventor: **Reginald F. H. McCoy,** Highland Park, Ill.

[73] Assignee: **The Singer Company,** New York, N.Y.

[22] Filed: **Aug. 25, 1970**

[21] Appl. No.: **66,729**

[52] **U.S. Cl.**.....**178/6.8,** 178/DIG. 6, 178/DIG. 35, 178/7.88

[51] **Int. Cl.**.....**H04n 3/16,** H01j 29/89

[58] **Field of Search**...178/DIG. 6, DIG. 23, DIG. 35, 178/6.8, 7.88

[56] **References Cited**

UNITED STATES PATENTS

3,580,978	5/1971	Ebeling	178/DIG. 35
3,560,644	2/1971	Petrocelli et al	178/6.8
3,525,804	8/1970	Owen	178/6.8 X
3,517,121	6/1970	Petrocelli et al.	178/DIG. 35
3,507,990	4/1970	Wolff	178/6.8
3,479,454	11/1969	Wolff	178/DIG. 35

FOREIGN PATENTS OR APPLICATIONS

467,195	6/1937	Great Britain	178/7.85

Primary Examiner—Robert L. Griffin
Assistant Examiner—Richard K. Eckert, Jr.
Attorney—Francis L. Masselle, William Grobman and Charles S. McGuire

[57] **ABSTRACT**

Apparatus which will provide, to a visual display comprising a plurality of scanned raster devices such as television monitors arranged to form a continuous display, a means of placing a high resolution image, which may be larger than the size of one device or monitor but smaller than the size of the total display, in a controlled position on one or more of the monitors in a manner such that the image will appear to be continuous from one monitor to another.
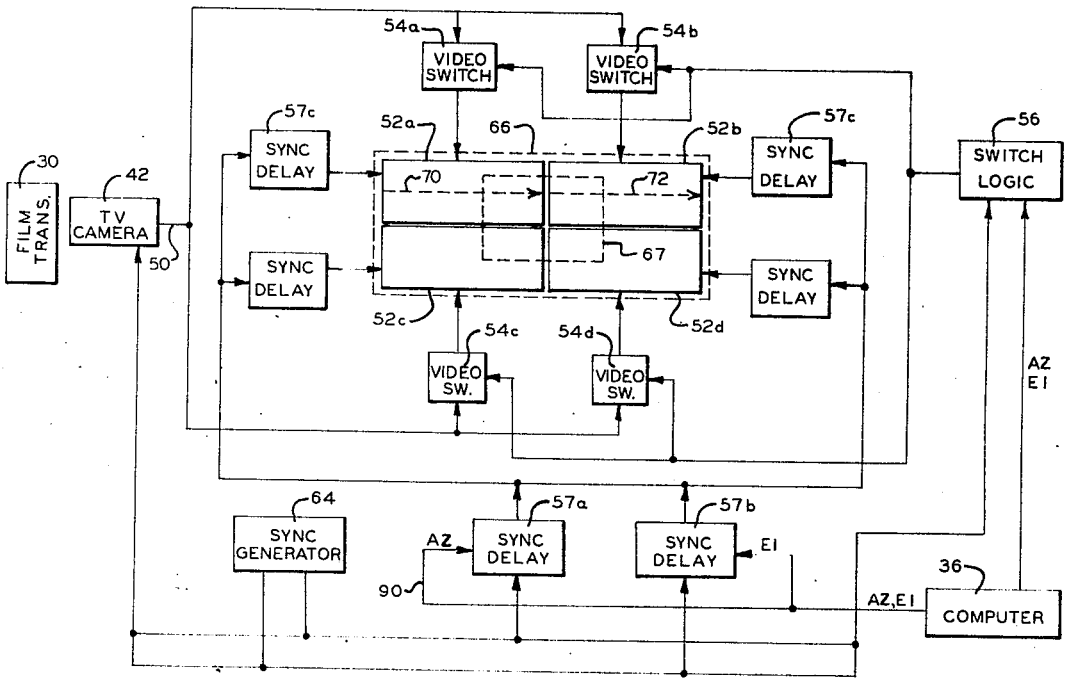
2 Claims, 9 Drawing Figures