US005597581A

United States Patent [19]

Kaessmann et al.

[11] **Patent Number: 5,597,581**

[45] **Date of Patent: Jan. 28, 1997**

[54] **CHITOSAN FOIL FOR WOUND SEALING AND PROCESS FOR ITS PREPARATION**

[75] Inventors: **Hans-Jürgen Kaessmann**, Hamburg; **Karl W. An Haak**, Am Hedreisch 25, D-44225 Dortmund, both of Germany

[73] Assignee: **Karl W. An Haak**, Dortmund, Germany

[21] Appl. No.: **397,219**

[22] PCT Filed: **Jun. 28, 1994**

[86] PCT No.: **PCT/EP94/02104**

§ 371 Date: **Apr. 14, 1995**

§ 102(e) Date: **Apr. 14, 1995**

[87] PCT Pub. No.: **WO95/01808**

PCT Pub. Date: **Jan. 19, 1995**

[30] **Foreign Application Priority Data**

Jul. 9, 1993 [DE] Germany 43 22 956.5

[51] **Int. Cl.**[6] **A61F 13/00**

[52] **U.S. Cl.** **424/449**; 604/305

[58] **Field of Search** 604/305; 514/21, 514/55; 424/447, 445, 446, 448, 449

[56] **References Cited**

U.S. PATENT DOCUMENTS

4,488,564	12/1984	Grollier et al.	424/81
4,532,134	7/1985	Malette .	
4,572,906	2/1986	Sparkes et al.	514/21
4,659,700	4/1987	Jackson .	
4,867,150	9/1989	Gilbert .	
5,035,893	7/1991	Shioya et al.	424/447
5,384,125	1/1995	DiPippo et al.	424/417

FOREIGN PATENT DOCUMENTS

0138385	4/1985	European Pat. Off. .
0295777	12/1988	European Pat. Off. .
0460774A2	12/1991	European Pat. Off. .
2922012	12/1979	Germany .
3321446	5/1984	Germany .
4322956C2	1/1995	Germany .

Primary Examiner—David Isabella
Assistant Examiner—David J. Cho
Attorney, Agent, or Firm—Herbert Dubno; Jonathan Myers

[57] **ABSTRACT**

The invention relates to a foil of chitosan for wound sealing. According to the invention this foil contains glycerin as an elasticity enhancing additives and has a perforated surface promoting gas exchange.
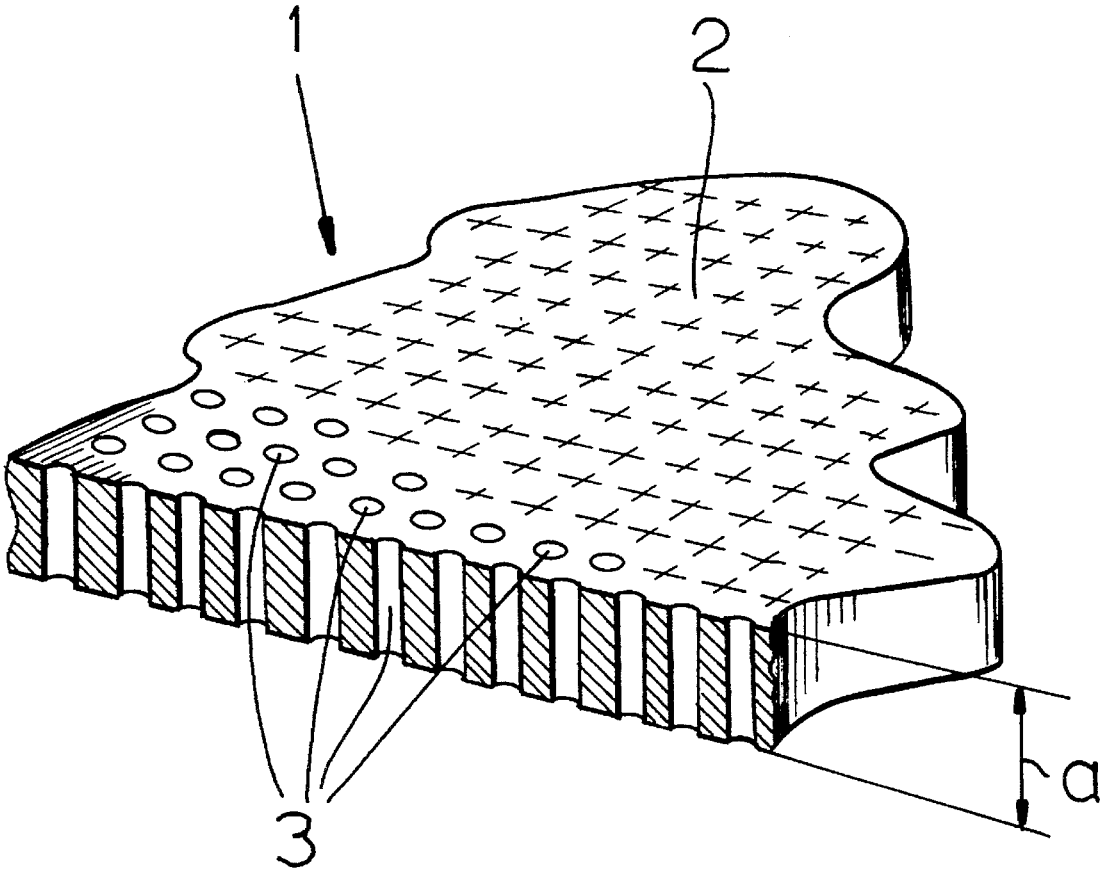
5 Claims, 1 Drawing Sheet