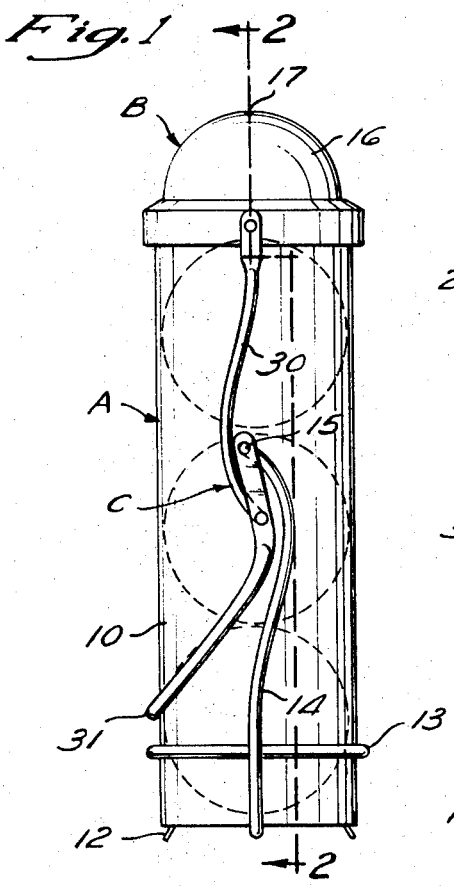

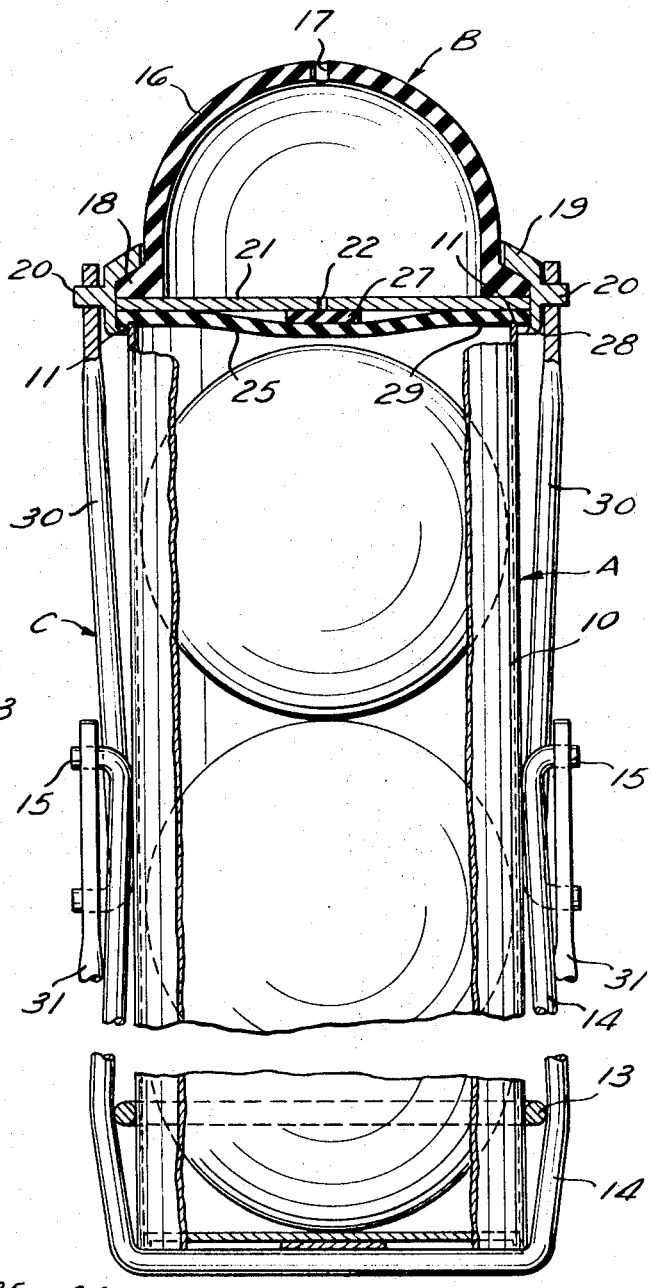

Fig. 2

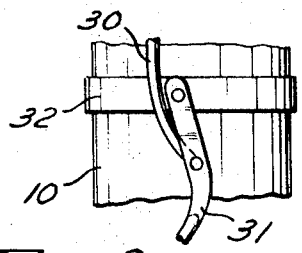

Fig. 3

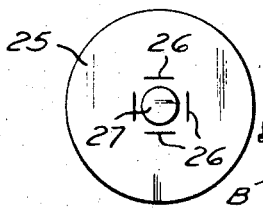

Fig. 4

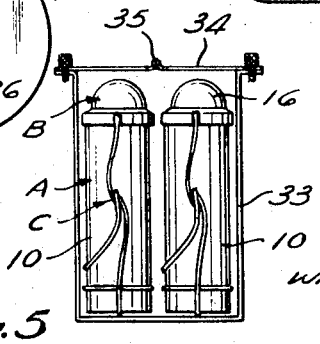

Fig. 5

INVENTOR.
JAMES C. HOBBS, II
BY
WATTS, HOFFMANN, FISHER & HEINKE
ATTORNEYS