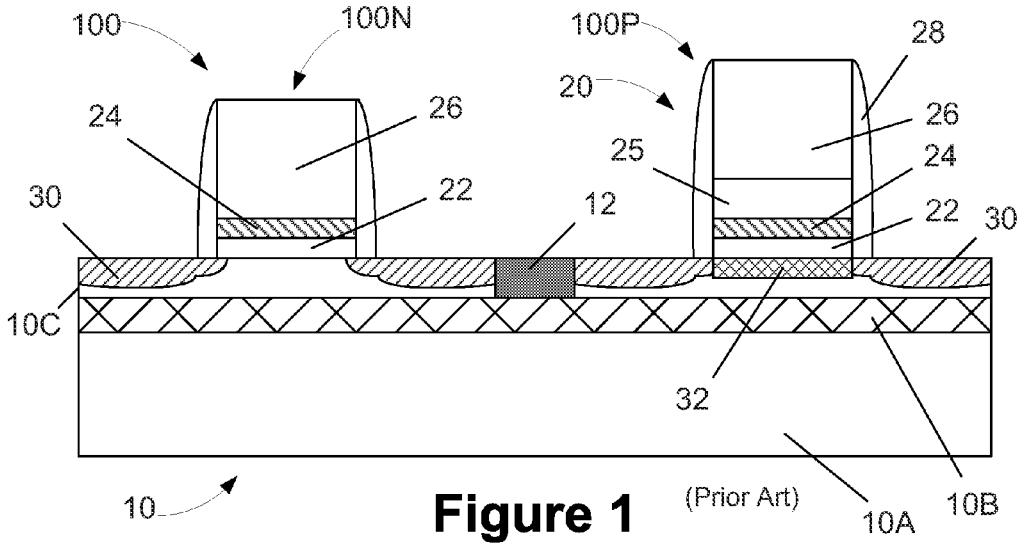

Figure 1 (Prior Art)

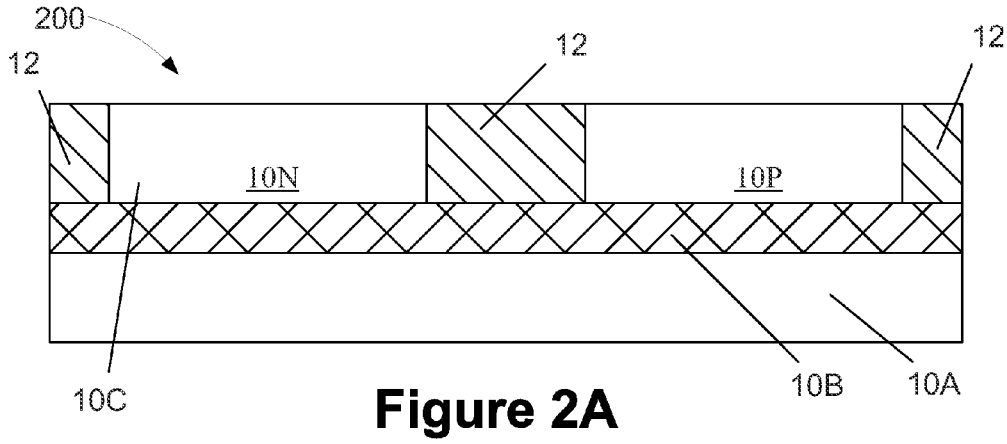

Figure 2A

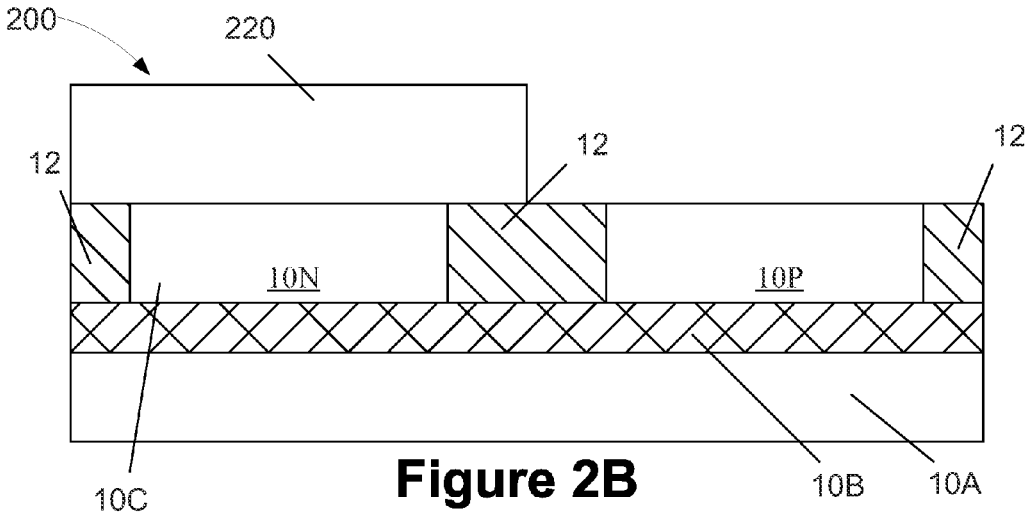

Figure 2B