FUSED MULTIFOCAL CORNEAL CONTACT LENSES

Filed Sept. 26, 1966 2 Sheets-Sheet 1

FIG. 1.

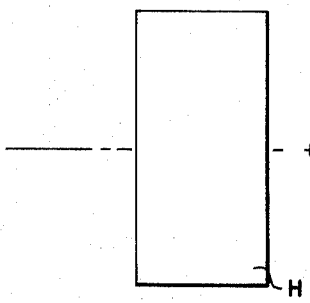

FIG. 2.

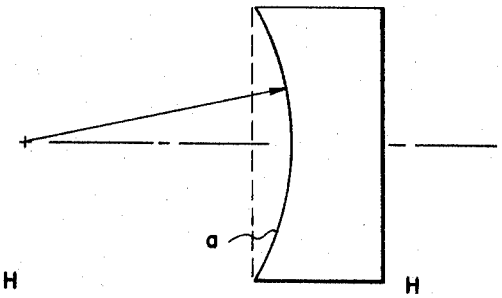

FIG. 3.

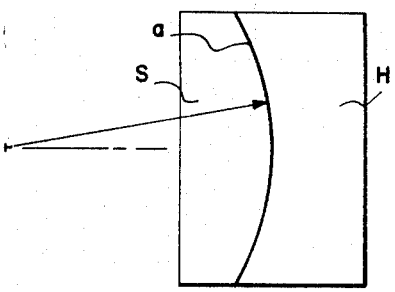

FIG. 4.

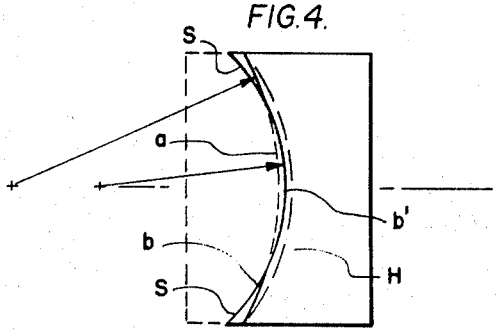

FIG. 5.

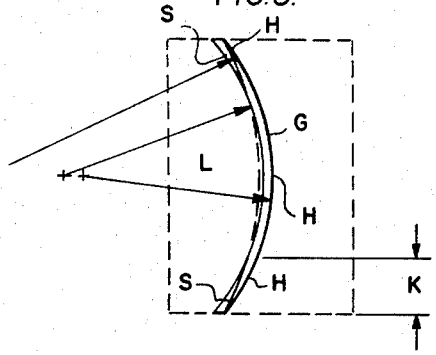

FIG. 6.

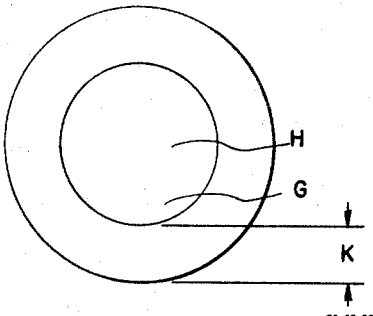

INVENTOR.
LEONARD BRONSTEIN
BY
Wm. H. Dean