US005672381A

United States Patent [19]

Rajan

[11] Patent Number: 5,672,381

[45] Date of Patent: Sep. 30, 1997

[54] **PRINTING OF REFLECTIVE SHEETING**

[75] Inventor: **J. Sundar Rajan**, Woodbury, Minn.

[73] Assignee: **Minnesota Mining and Manufacturing Company**, St. Paul, Minn.

[21] Appl. No.: **481,236**

[22] Filed: **Jun. 7, 1995**

Related U.S. Application Data

[60] Continuation of Ser. No. 194,149, Feb. 9, 1994, abandoned, which is a division of Ser. No. 772,967, Oct. 8, 1991, Pat. No. 5,378,575, which is a division of Ser. No. 524,147, May 15, 1990, Pat. No. 5,085,918.

[51] **Int. Cl.**[6] **B05D 3/02**; G03G 9/08; G09F 13/16; B31F 1/07

[52] **U.S. Cl.** **427/198**; 427/195; 427/275; 430/120; 430/124; 101/32; 40/616; 40/208; 40/200

[58] **Field of Search** 430/120, 124, 430/291; 427/198, 195, 275; 40/200, 208, 616; 101/32; 434/113, 114

[56] **References Cited**

U.S. PATENT DOCUMENTS

1,438,815	12/1922	Elsen	101/32
2,681,473	6/1954	Carlson .	
2,955,052	10/1960	Carlson et al.	101/32
3,590,000	6/1971	Palmeriti et al.	252/62.1
3,679,612	7/1972	Titow .	
3,933,665	1/1976	Van Engeland et al. .	
4,204,865	5/1980	Kuehnle et al. .	
4,206,064	6/1980	Kiuchi et al. .	
4,551,406	11/1985	Schaedlich et al. .	
4,619,876	10/1986	Woodward .	
4,621,039	11/1986	Ciccarelli et al. .	
4,637,974	1/1987	Kubit .	
4,648,932	3/1987	Bailey .	
4,650,421	3/1987	Anczurowski	434/113
4,664,966	5/1987	Bailey et al.	428/203
4,758,952	7/1988	Harris, Jr. .	
4,840,863	6/1989	Otsu et al. .	
4,966,829	10/1990	Yasuda et al. .	

FOREIGN PATENT DOCUMENTS

309588	4/1989	European Pat. Off. .
424131	4/1991	European Pat. Off. .
3515191	11/1985	Germany .
3714288	11/1988	Germany .
61-172155	8/1986	Japan .
1-5833	1/1989	Japan .
2126389	3/1984	United Kingdom .

OTHER PUBLICATIONS

3M Brochure for LBQ Printing System.

Schaffert, R.M., M.A., Ph.D. *Electrophotography*, John Wiley & Sons, New York, pp. 27–31 1975.

3M Brand Multifunction Printer Model 1800 Operator's Guide.

Shein, L.B., *Electrophotography and Development Physics*, Springer–Verlag, Berlin, 1988 pp. 58, 60.

Primary Examiner—George F. Lesmes
Assistant Examiner—Bernard P. Codd
Attorney, Agent, or Firm—Gary L. Griswold; Walter N. Kirn; Peter L. Olson

[57] **ABSTRACT**

A weather resistant sign and a method of printing a sign including the steps of providing a sign component and an image definition, applying dry toner powder to surface portions corresponding to the image definition, and fusing the applied toner. Preferably, the fused toner is protected from weather by a transparent protective layer. A toner composition and a computer program for printing are also disclosed.

4 Claims, 12 Drawing Sheets
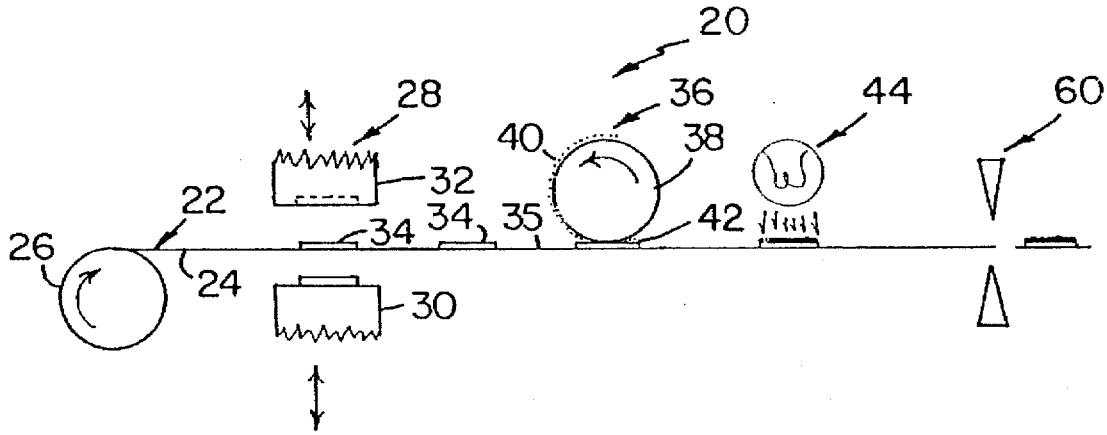
Microfiche Appendix Included
(1 Microfiche, 73 Pages)